PERFECT JET

VERTICAL/HORIZONTAL TRAVELING COLUMN MACHINE CENTER
VERTICAL MACHINE CENTER
DEEP HOLE DRILLING & BORING MACHINE
FLOOR TYPE BORING & MILLING MACHINE
CNC & CONVENTIONAL BED-TYPE MACHINE
DOBLE COLUMNS MACHINING MACHINE
CUSTOMIZATION MACHINE

PING JENG MACHINERY INDUSTRY CO., LTD.
No.30,Shan Shia Lane, Feng Shin Rd., Shin Kang District,
Taichung City 42271, Taiwan
Tel：04-2572-2520 (Rep.)　Fax：04-2572-2525 / 04-2572-2741
E-mail：ping.jeng@msa.hinet.net

201710

PERFECT JET

PING JENG MACHINERY

TRAVELING COLUMN HORIZONTAL MACHINING CENTER
FLOOR TYPE HORIZONTAL BORING & MILLING MACHINE

http://www.perfect-jet.com.tw

Profile

PERFECT JET

Mission: Sincerity Progress Harmony

Vision : Cultivate Good Karma in the business, Benefit All People

History of Timeline

1981~Ping Jeng Company starts in Taichung, Taiwan. Capital 2.1 million.Launch :RD-600&600BL

1982~As costumer needs to produce Bed Type Milling Machine:BM-2Vand Radial Drill Machine: CNC-RAMILL-VI.

1983~Launch: BM-3V&BM-4V。

1984~Launch:BM-3MV&BM-4MV。

1985~Launch:BM-3DS&4DS

1986~Launch:CNC-MGD-500&1000。

1987~Launch:CNC-MGD-1015&1020

1988~Launch:CNC-MGD-1520&1525，TRAK-3S(BM-22VDA)

1989~Launch:DH-1500&3000&6000. Cooperate with American well-known NC Company and entered the U.S. market with CNC Milling Machine successfully. Capital increasing to 19.8 million.

1990~Launch:CNC-MGD-613&813，TRAK-5S(BM-24VDA)

1991~Launch:CNC-MGD-816&820

1992~Launch:CNC-MGD-1016&1020，TRAK-2S(BM-21VCA)

1993~Launch:CNC-51-VI/GA/GF(BM-1687). Expand European market & start to develop Box Ways machining centers. CE -TUV of Germany Authentication approved for CNC Milling Machines. Capital increasing to 30 million.

1994~Launch:CNC-61-VI/GA/GD(BM-2087)

1995~Launch:CNC-71-VI/GA/GD(BM-2587)，CNC-81-VI/GA/GD(BM-3087)

1996~Launch:MCV-64BT

1997~MCV-85B&85G

1998~MCV-100B&100G

1999~Launch:MCV-168G&168B.All plants destroyed by 921 earthquake and almost forced to close down the business; after financing and capital increasing to 68 million, and enable to reconstruct the plants.

2000~Launch:MCV-86&116B. Merge a machinery company and acquire related technical staffs and some outstanding European agents.
Develop Linear Guide Way machine center.

2001~Launch:MCV-127B &147B&147G

2002~Launch:MB-4R372 -4axes ROUTING. & MCV-M8 & M6

2003~Launch:CNC-24MA(740) CNC-34/36/46MB (1050-1350)，MCV-M10. Attend EMO and international exhibitions actively to expand global market.

2004~Launch:CNC-12ME(QCM)，MCV-M11. CE-TUV of Germany Authentication approved for all machine tools and successfully expanded Turkey and East Europe.

2005~ Launch:MB-1207/1210，MCV-M5. As Europe market need to R&D the Moving Column machining centers serial. New CIS & Logo – PERFECT JET & implement ERP management and target management.

2006~Launch:MHD-2678，DH-3100，MCV-M7

2007~Launch:MV-107P&107U，MV-64P&64U. Italy well-known machinery dealer ask to be the exclusive agent for Moving Column serial and sign up 10 machines per year quota.

2008~Launch:MV-86P&86U, MB-1220.

2009~Launch:MCV-2010G, MV-308. R&D Submicron high precision machining center, and joint program of Ministry of Economic Affairs.

2010~Launch:MV-308-5X, MCV-188G.

As European Auto parts and Aero parts market needs, to develop 5-axis swiveling head MV-308-5x and gain the Patent.

2011~Launch:MH-1500D, MH-800P, MCV-435 υ . MCV-435 υ is launched in TIMTOS Exhibition and wins Grand Award and IENA in Germany invention competition for Grand Champion Award also. Capital increasing to 168 million.

2012~Launch:MH-1213, MH-500P, MH-630P, MCV-2510B/G

2013~Launch:BM-1620, CNC-GD-4axes, CNC-GD-6axes, CNC-GD-8axes

All machines are developed in-house. We have an outstanding R&D team who is dedicated to researching and developing new machines many years with expertise. Using AUTOCAN R14 software and AUTODESK3D/ INVENTOR SERIES.

COMPANY SCOPE:
Land Area:30000m²，Factory Area:16000 m²，Office Area:22000 m²，Capital increasing to 168 million.

Patent

Perfect World, Perfect Jet, Perfect Efficiency:
Creating job opportunity and supporting educational constitution are the main principles of Ping Jeng.
To build a better society, Ping Jeng keeps doing its best to benefit the community for now and the future.

Geagraphic Location

Traveling Column Family

PERFECT JET

Designed and Built with Excellent Quality, Efficiency and Accuracy

MH-6357

MH-1500D40-2H/MH-500D40-2H

MH-310

MH-206

MH-800P

MH-630P

MH-1500D50-2H Floor Type Horizontal Boring &Milling Machine

PERFECT JET

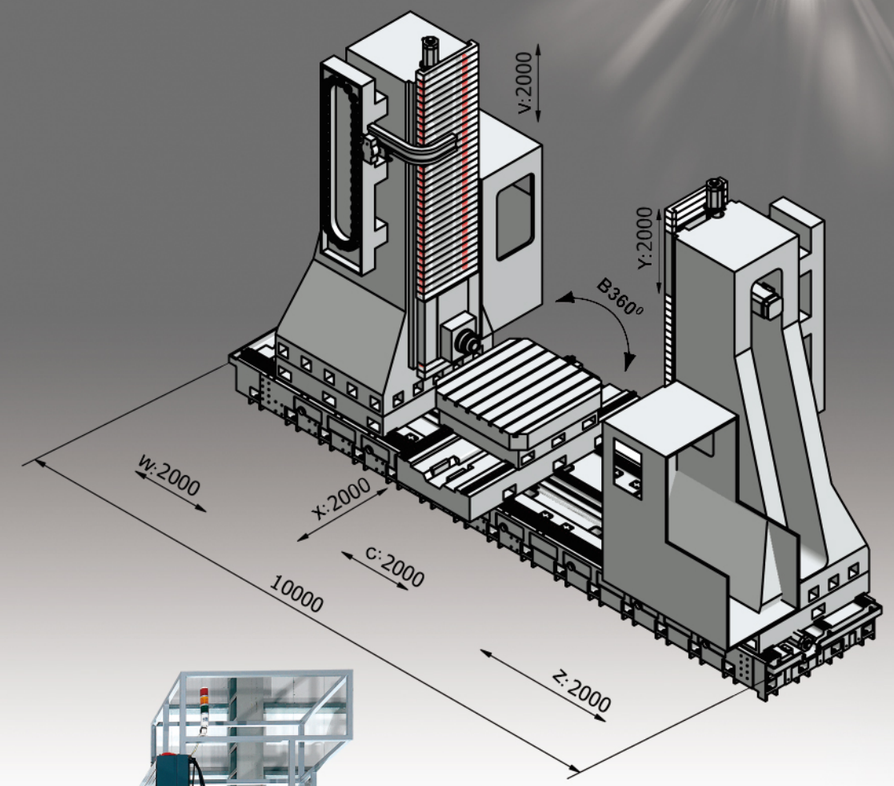

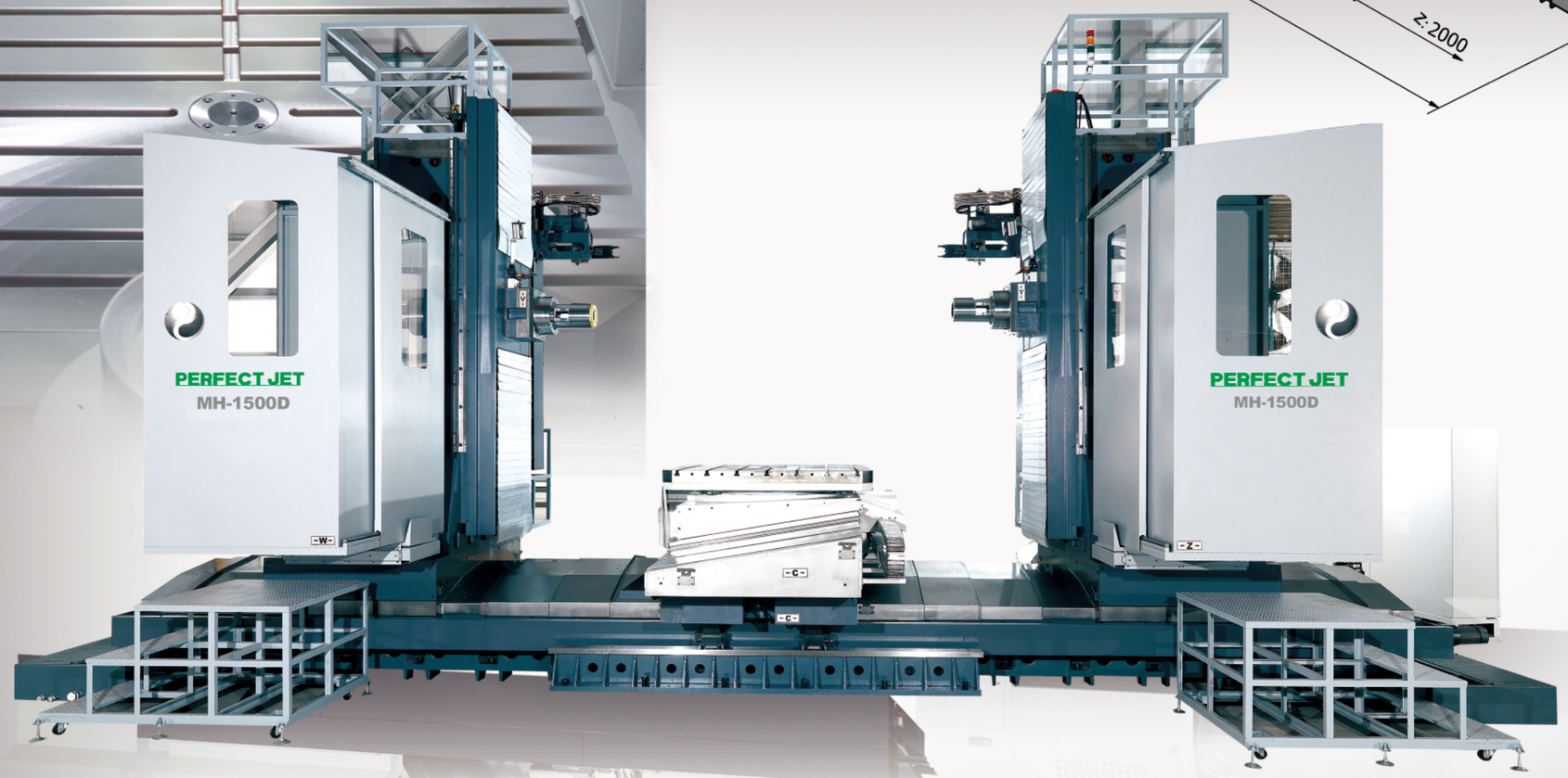

MH-1500D50-2H Double Columns & Double Efficiency

PERFECT JET

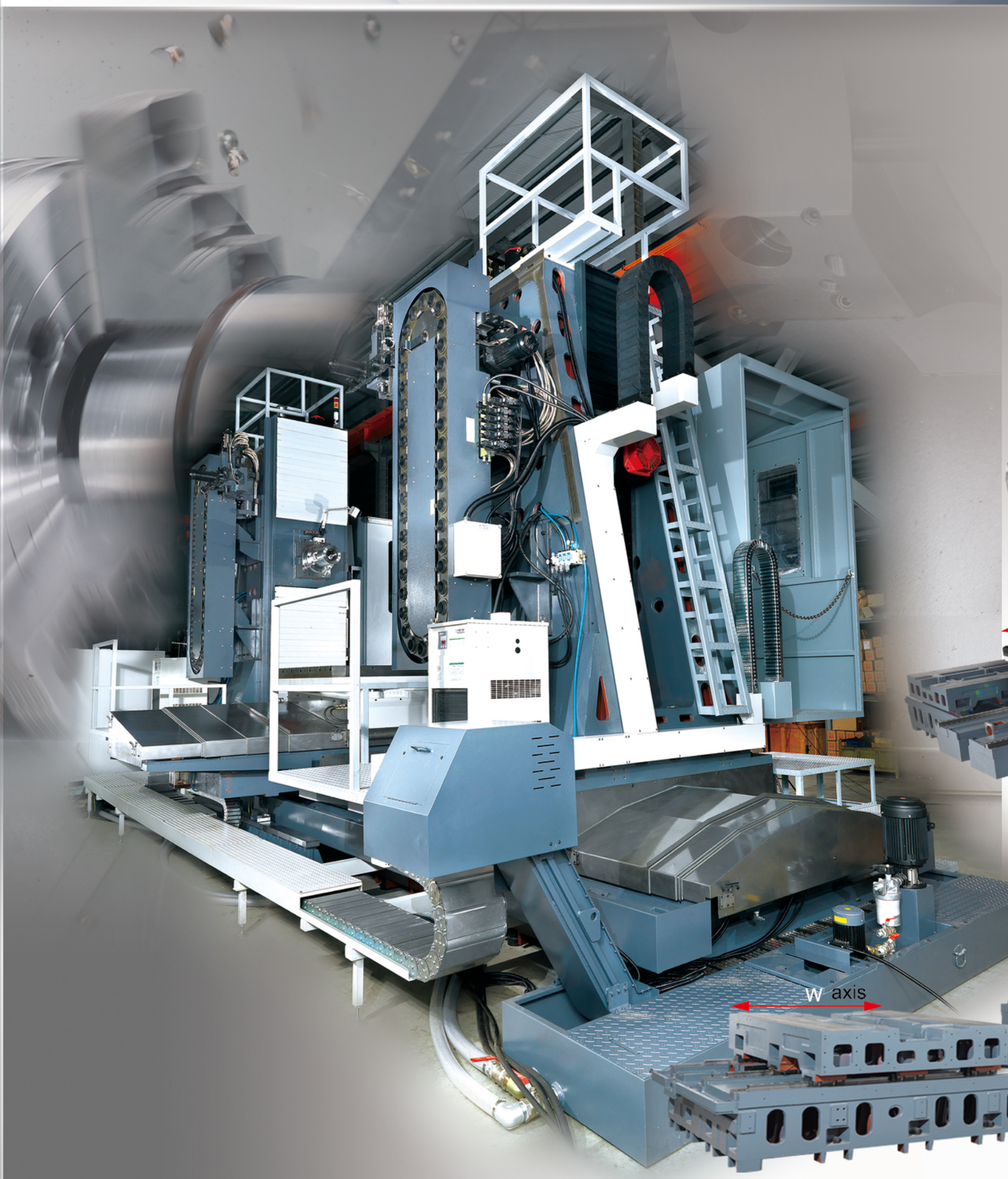

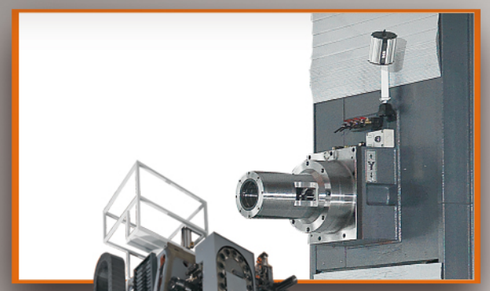

Tool holder bushing

Twin column with arbor application

High strength wire safeguard

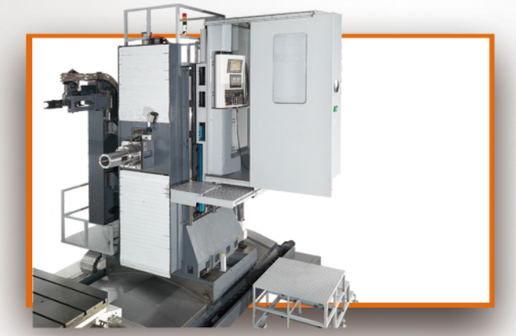

Tool change platform with operation cabinet lifting

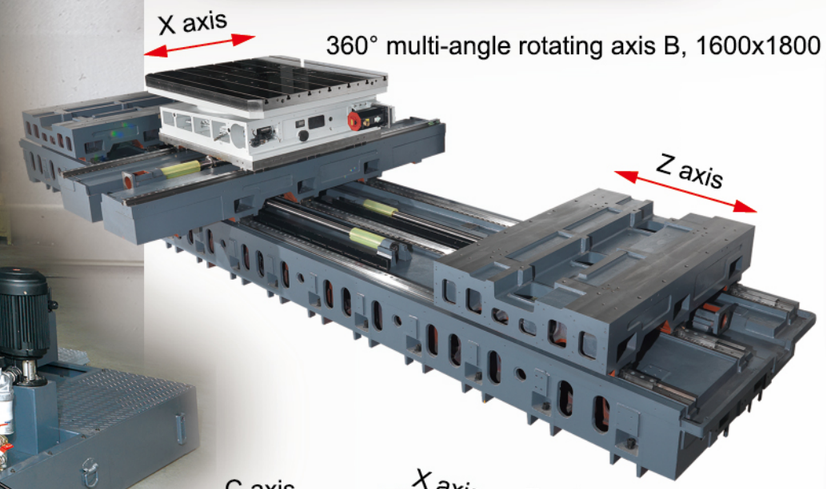

360° multi-angle rotating axis B, 1600x1800

High inclination telescopic cover

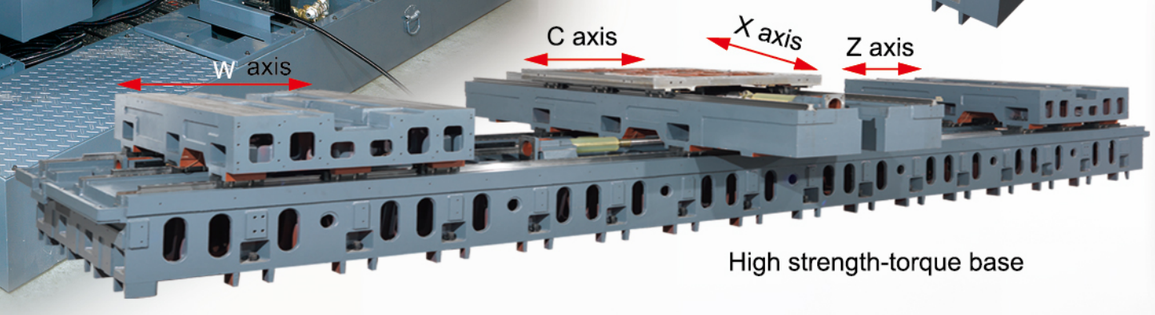

High strength-torque base

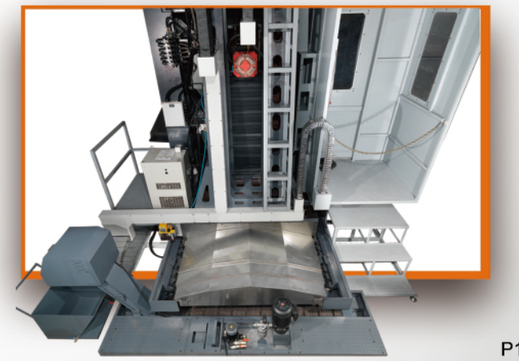

Rear telescopic cover of column

MH-1500D40-2H / MH-1000D40-2H / MH-500D40-2H
Double Columns & Double Efficeincy

PERFECT JET

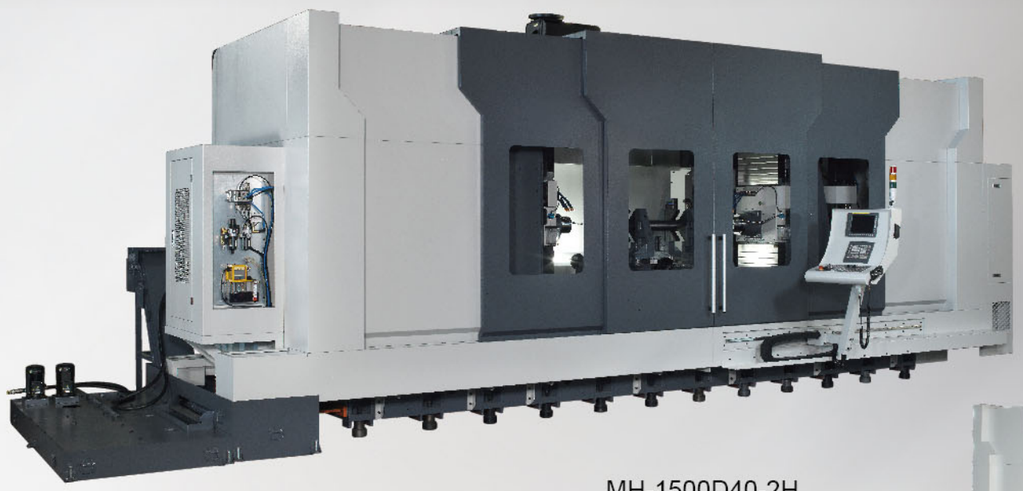

MH-1500D40-2H

MH-500D40-2H

MH-1500D40-2H

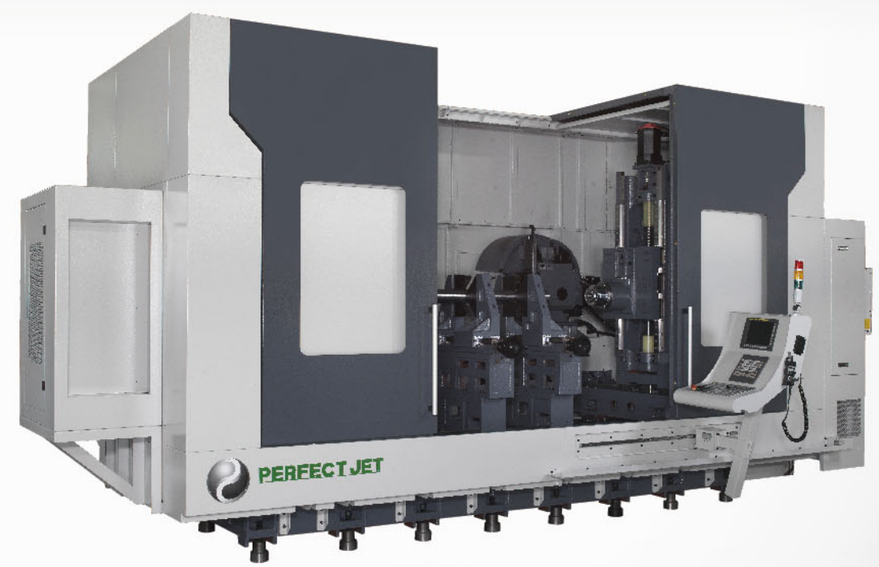

MH-500D40-2H

MH-1500D40-2H / MH-1000D40-2H / MH-500D40-2H
Double Columns & Double Efficiency

PERFECT JET

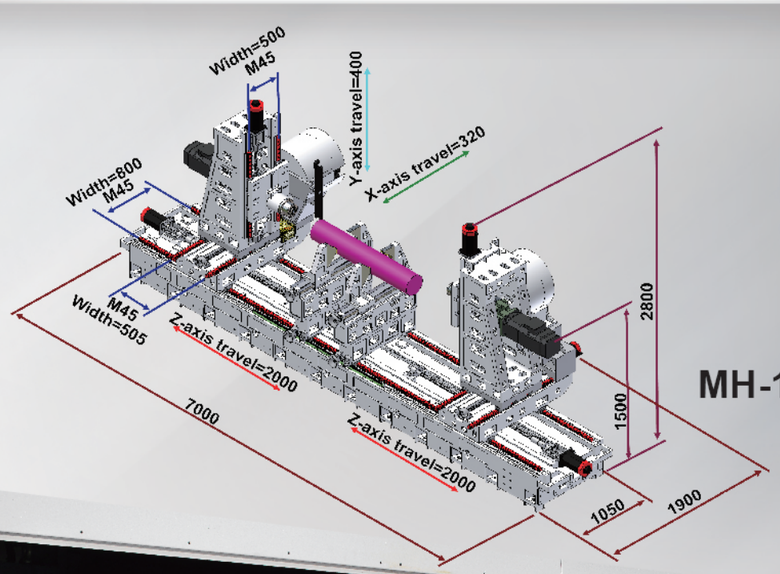

MH-1500D40-2H
(Unlt:mm)

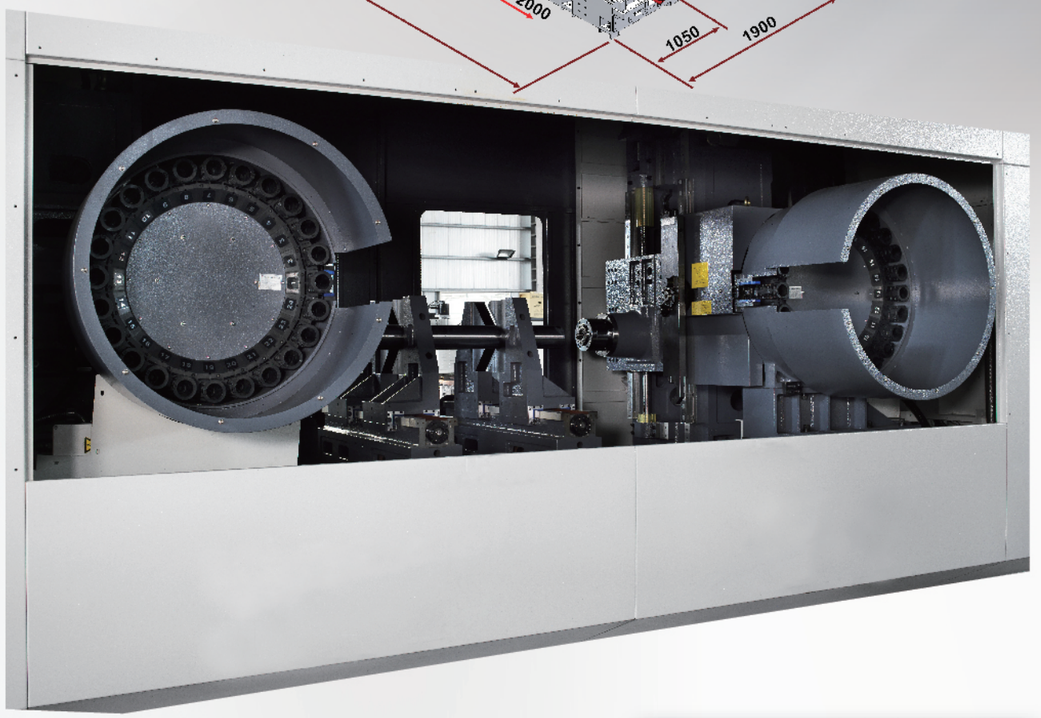

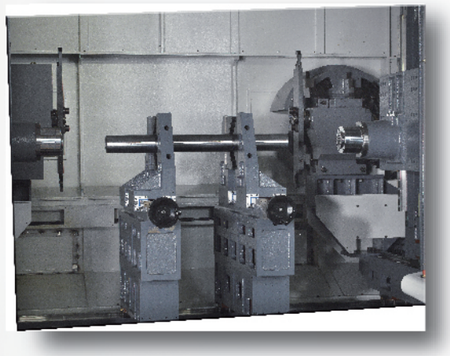

Model		MH-1500D50-2H	MH-2000D40-2H	MH-1500D40-2H	MH-1000D40-2H	MH-500D40-2H
Travel						
X / Y / Z axis Travel	mm	2000 / 2000 / 1500	360 / 400 /2000	360 / 400 / 1500	320 / 400 / 1000	320 / 400 / 500
U / V / W axis Travel	mm	2000 / 2000 / 1500	360 / 400 / 2000	360 / 400 / 1500	320 / 400 / 1000	320 / 400 / 500
Spindle nose to table center	mm	600-1900				
Spindle Center to Table surfac	mm	125-2125				
Workpiece dimension						
Max Workpiece lengh	mm		4,200	3,200	2,100	1,000
Max Workpiece size	mm		ø250	ø250	ø250	ø200
Table size	mm	1600x1800				
table loading capacity	kg	15,000				
T-slot	mm	22x7x225				
Spindle						
Spindle Max. Speed	rpm	6,000	6,000			
Spindle Taper		BT-50	BBT-40			
Spindle Bearing ID	mm	90	70			
Spindle Transmission		HI-LO GEAR	Gear Box			
Feedrate						
Max. X/Y/Z Rapid Speed	M/min	6/6/6	30/30/24			
Cutting Feedrate	mm/min	1-5000	12,000			
Automatic Tool Change						
Tool Shank		BT-50	BT-40			
Tool Capacity	pc	40	24			
Max.Tool Diameter (without Adjacent Tool)	mm	110/220	80/150			
Max. Tool Length	mm	400	Ø80=250 /(Ø150=200)			
Max. Tool weight	kg	15	8			
ATC Changing Time	sec	7.5	2.5			
Tool Selection Method		ARM				
Controller System						
Fanuc		32i Dual system	0iMF Dual system			
Motor						
Spindle Motor Power	Kw	18.5/22x2	11/15x2			
X/Y/Z axis Motor	Kw	9/9/9	3/3/4.5			
U/V/W axis Motor	Kw	9/9/9	3/3/4.5			
Hydraulic System Motor	HP	7.5	NONE			
Coolant Pump system Motor	Kw	0.54	0.54			
Power Supply						
Power Requirement	Kva	80	60			
Oil Tank / Coolant Tank Capacity						
Hydraulic System Capacity	Liter	300	NONE			
Lubrication System Capacity	Liter	4	2			
Coolant System Capacity	Liter	450	300			
Mechancial Specification						
Height	mm	5200	3235			
Floor Area	mm	11140X5400	10800X4685	9533X4685	8400X4685	7200X3565
Weight	kg	55000	21000	18000	15000	12000
Base						
Cast iron						

Standard Accessories:

1. Direct drive XYZ
2. M.P.G.
3. Full splash guard
4. Spindle HI/LO gear box
5. Spindle air blast
6. Spindle chiller unit
7. Spindle sound proof
8. Automatic Lubrication system
9. Coolaant ring around spindle
10. XYZ roller type guide way
11. Air and washing gun
12. Wassh down nozzles
13. Halogen work light & alarm light
14. RS-232 interface & 10M cable
15. Heat exchanger on electric cabinet
16. M30 Auto power off
17. Levelingpads and adjusting screws
18. Tool box with adjusting tools
19. Operation manual and parts list
20. Rigid tapping
21. Chain type chip conveyor
22. Chip auger

Optional Accessories:

1. Coolant through spindle
2. C.T.S. with separate coolant tank
3. Upgrade spindle motor
4. 12,000/15,000/24,000 rpm
5. Scraper type chip conveyor
6. Oil skimmer
7. Voltage regulator
8. transformer
9. Seaworth packing
10. ZF gear box

MH-6357 Floor Type Horizontal Boring & Milling Machine

PERFECT JET

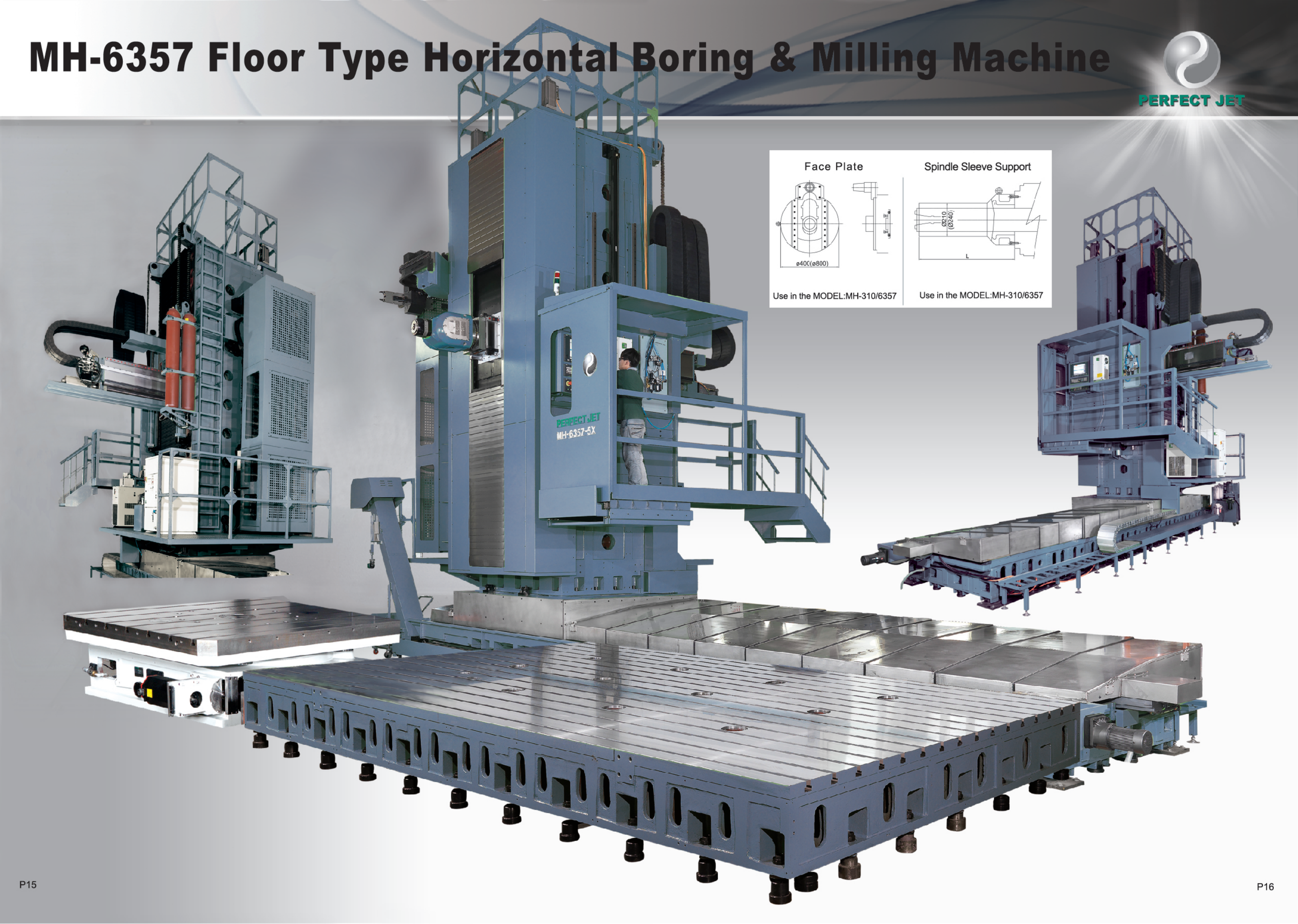

MH-6357 Floor Type Horizontal Boring & Milling Machine

PERFECT JET

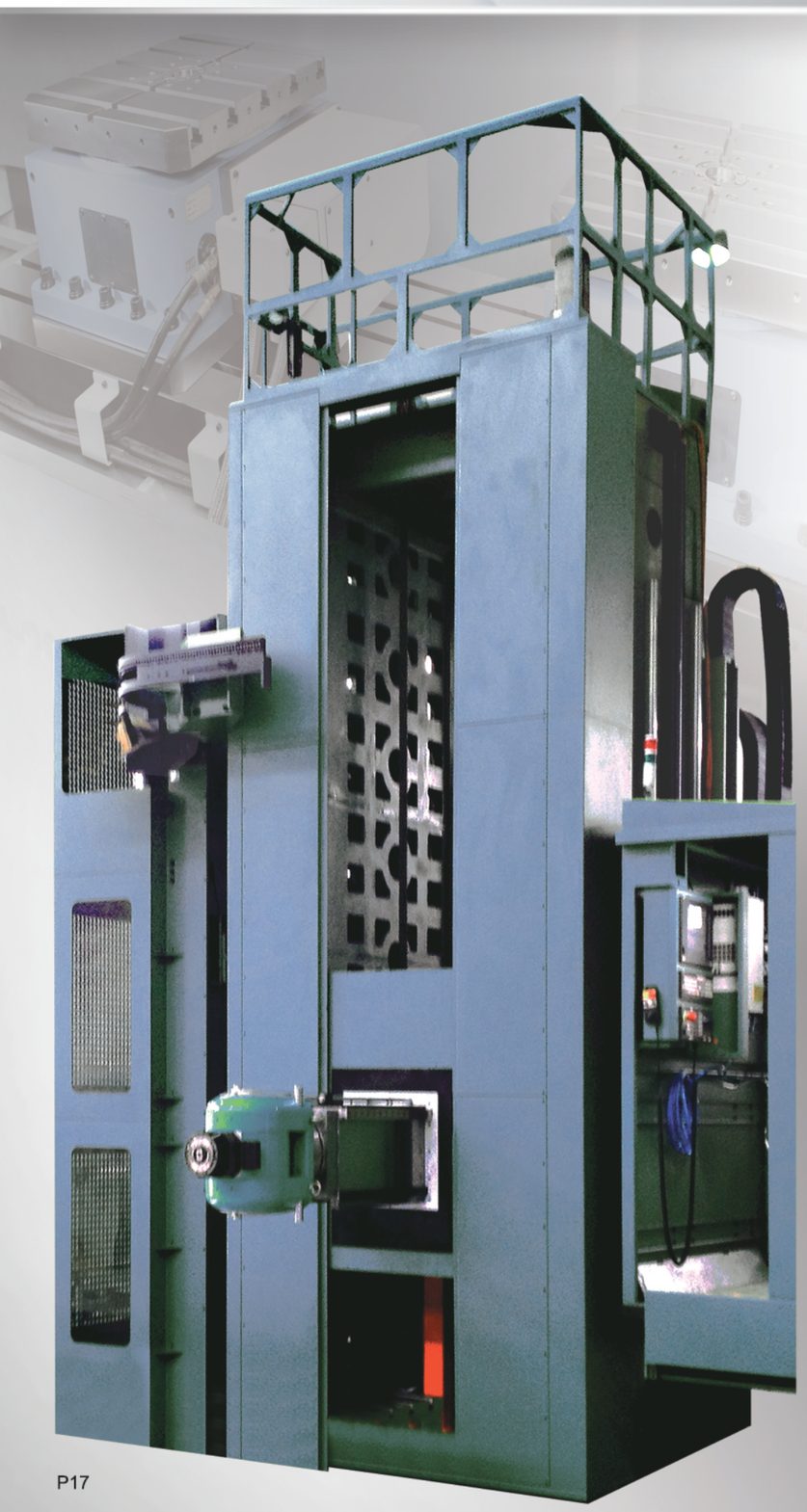

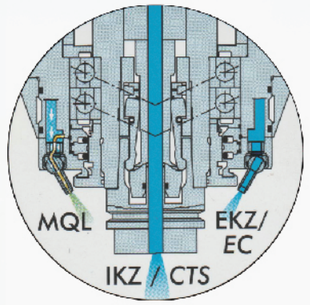

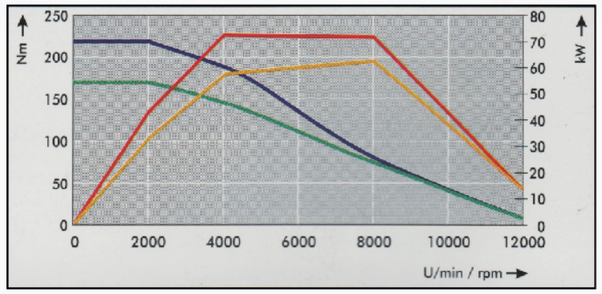

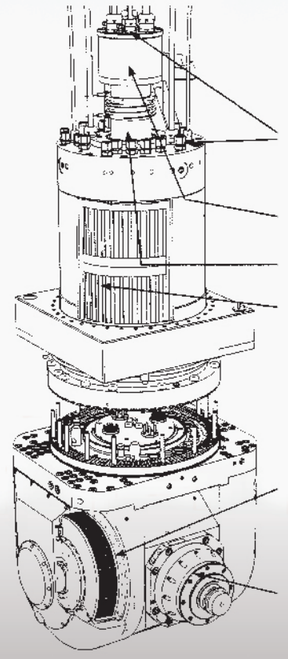

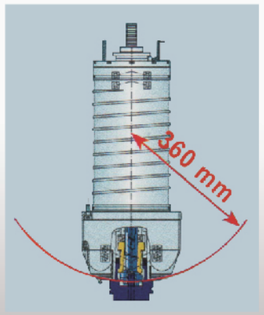

CS 34-180-S	
Nennleistung S1 / *nom. power S1 (kW):*	34
Max. Drehmoment S6 / *max. torque S6 (Nm):*	220
Max. Drehzahl / *max. speed (U/min / rpm):*	12.000
WZ-Schnittstelle / *tool inferface:*	HSK-A100*

*optional SK50 / *option: SK50*

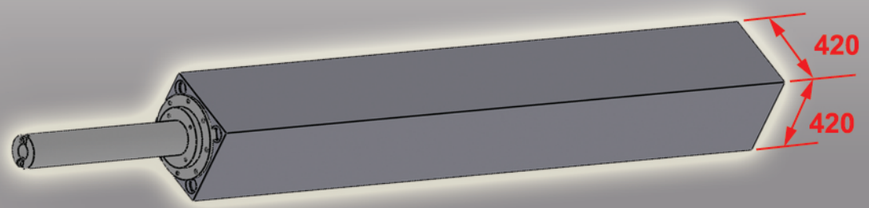

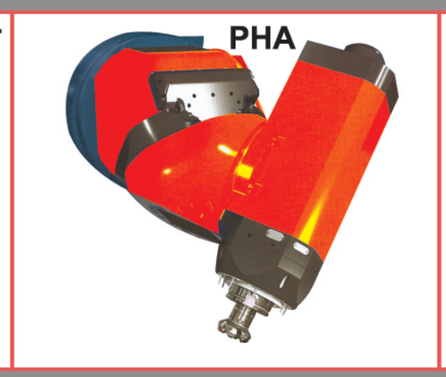

MH-6357 Floor Type Horizontal Boring & Milling Machine

PERFECT JET

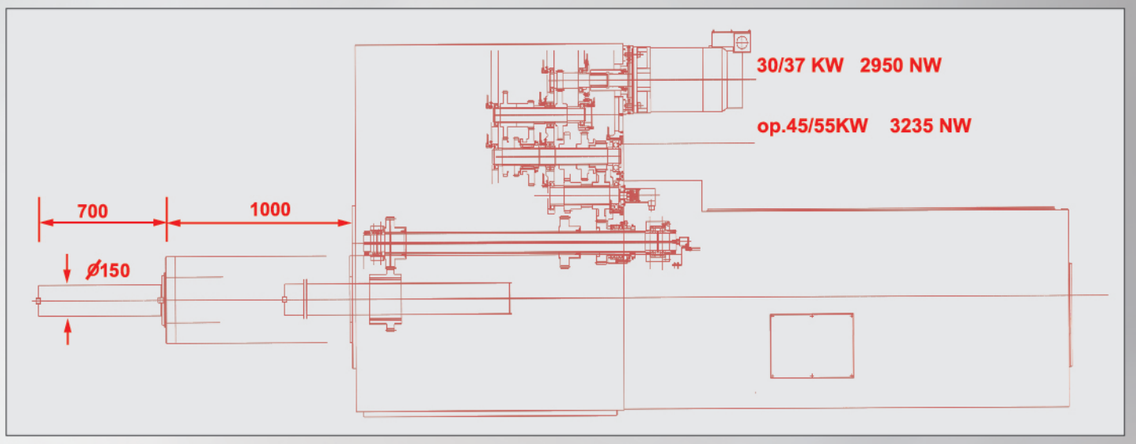

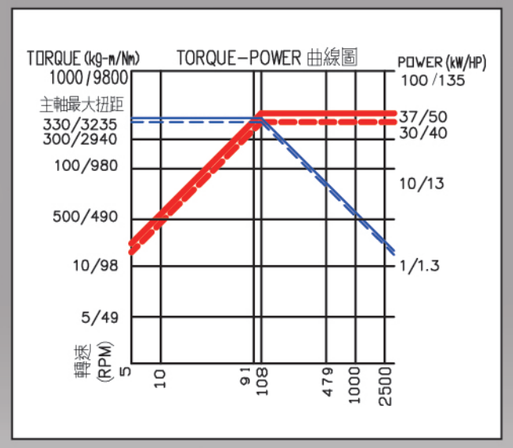

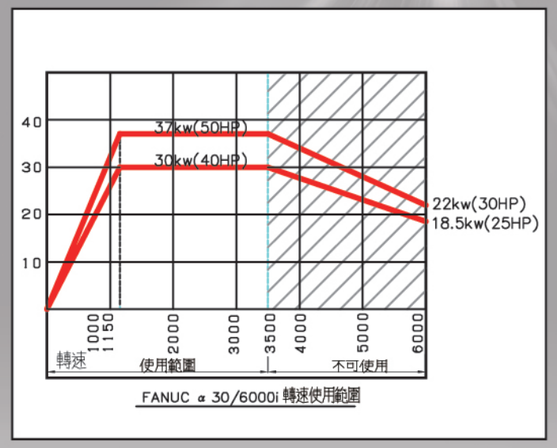

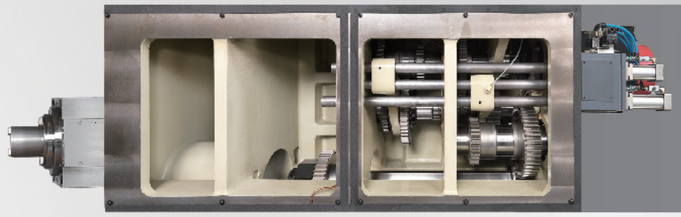

High Rigid Structure Head:
Box construction can support
the best stabilizaton while it does boring

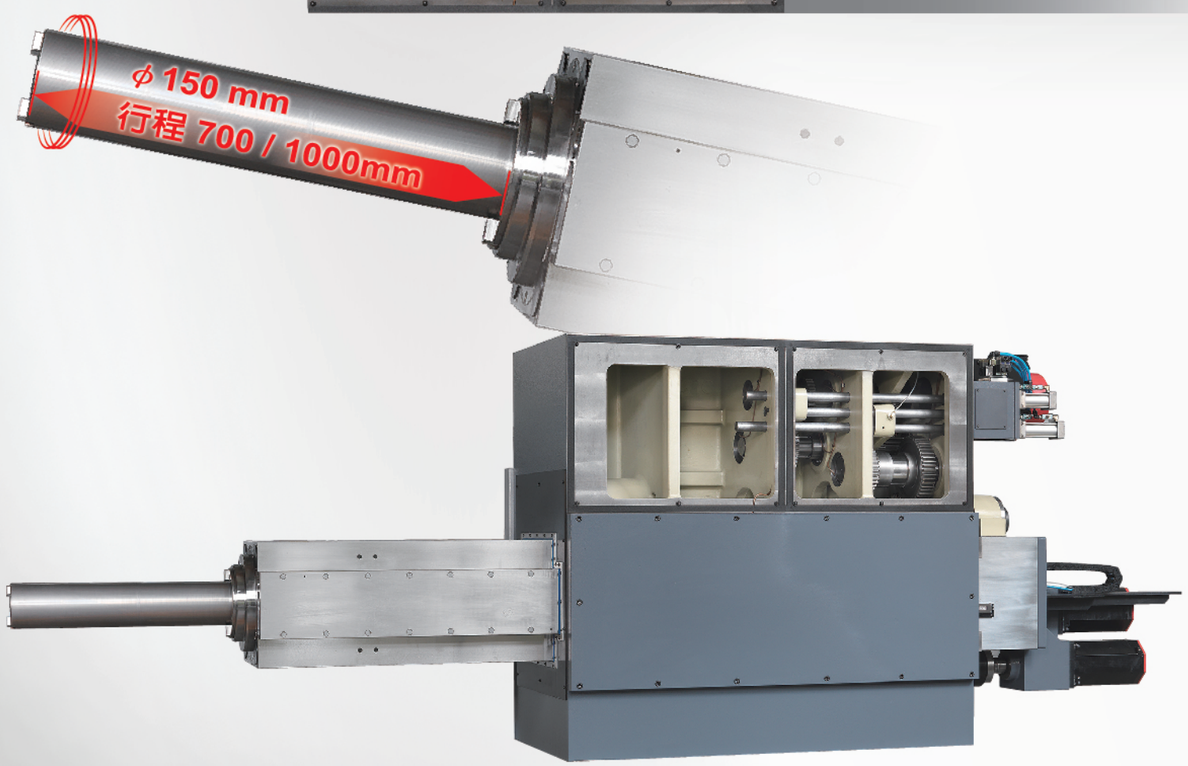

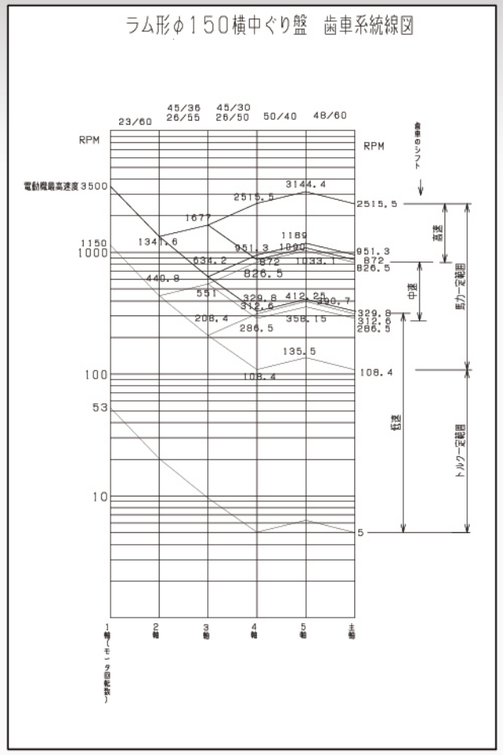

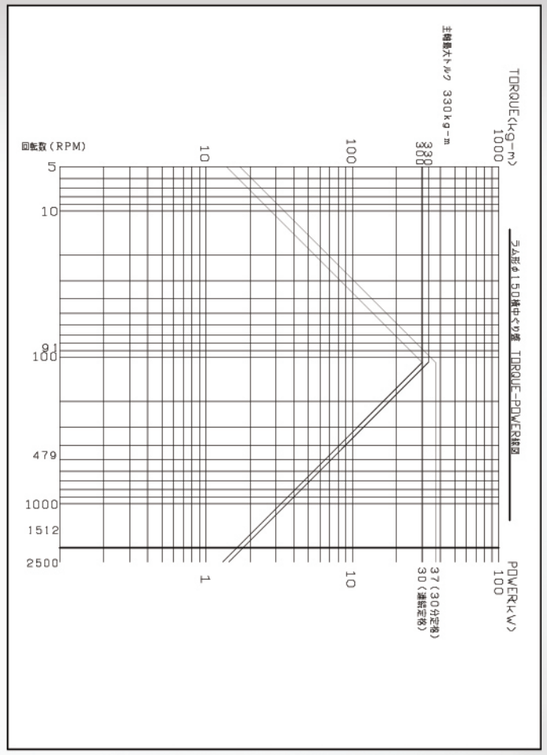

Rotary Table

PERFECT JET

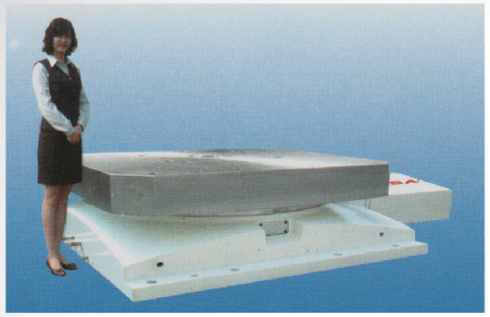

- Suitable for Horizontal Machining Center, floor type boring machine. For both indeexing & simulltaneous machhine.
- Hi-Accuracy, Adapting a special anti-wearing alloy of bronze/nickel double-lead worm wheel and hardened steel worm scrrew ensure long term indexing accuracy.
- Could be manufactured according to customers' designing and interface of machine Saddle.
- Hydraulic Clamping, high rigid brake structure for heavy cutting.
- Table size from size 400mm to 3,000mm or manufactured according to customer's requirement, high loading/accuracy design also available suitable for heavy machining and metrology applications.
- Build-in hydraulic ports system suitable for Special Machine of Horizontal machining Center and Automobile/Motorbike Industrial.
- All units in Tables are manufactured from high quality materials and workmanship. Every Table has Running/Accuracy testing for at least 48 hours. All electrical parts are imported from Japan/Germany for performance confidence.
- Random dividing 0.001 degrees, Indexing Accuracy according to custome's requirement 6 sec, 10 sec. or higher indexing accuracy. (encoder is required)

ITEM / MODEL		HRT-1000	HRT-1500	HRT-2000	HRT-2500	HRT-3000
Table Size (mm)		ϕ1000 □1000X1000	ϕ1500 □1500X1500	ϕ2000 □2000X2000	ϕ2500 □2500X2500	ϕ3000 □3000X3000
T-slots size (mm)		22	28	28	32	32
Table Swing Dia. (mm)		○1000 □1000	○1500 □1950	○2000 □2600	○2500 □3200	○3000 □3800
Total Height (mm)		530	530	600	600	600
Max. Loading (kgs)		10,000	20,000	35,000	60,000	90,000
Indexing Accuravy (sec.)		A6" B10"	A6" B10"	A6" B10"	A6" B10"	A6" B10"
Repeatability (sec.)		4"	4"	4"	4"	4"
Clamping Force (kgs)		10,000	15,000	20,000	37,000	70,000
Machining Torque (kg/m)		300	700	900	1600	3100
Parallelism Of Table Top and Frame Bottom (mm)		0.01/300	0.01/300	0.01/300	0.01/300	0.01/300
Gear Ratio		1/360	1/720	1/720	1/720	1/720
Servo Motor Type	FANUC	α22 i	α30 i	α30 i	α30 i	α30 i

※All specifications can be modified according to customers' requirement.

DIMENSION

HRT-1000

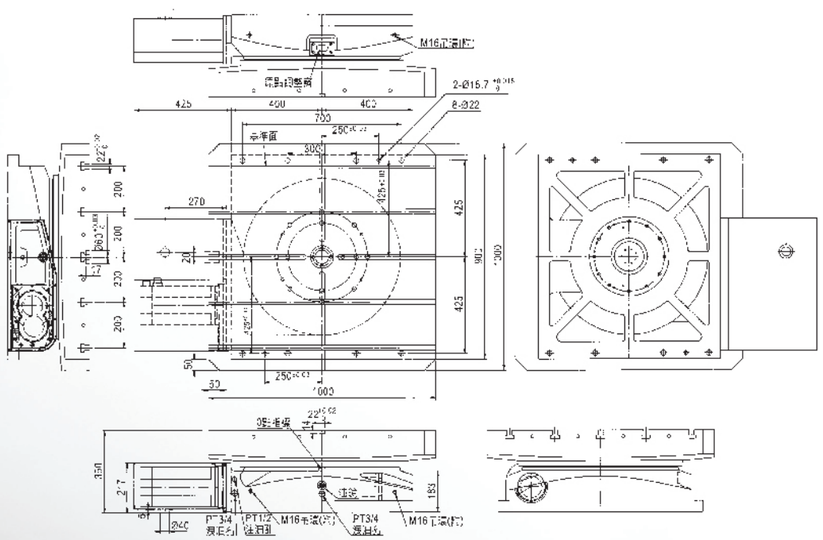

MH- 6357- 4317 / 6357/8317 / 10317 / 12317-5X

		UNIT	4317	6357	8317	10317	12317	6357-5X
Travel	X axis	mm	4000	6000	8000	10000	12000	6000
	Y/Z axis	mm	3000(op.4000-5000-6000)					3000/1300
	W/Z axis	mm	700 / 1000					op
	Spindle nose to table surface	mm	(-100) -16000					(-100)-1200
	Spindle center to column surface	mm	450-(3100-6100)					750-(3750-6700)
	X/Y/Z way span	mm	(3way)1500/1310/420 (4way)1900/1300/367					
	Position accuracy	mm	±0.005					
	Repeatability accuracy	mm	≦ 0.01					
	A axis rotary angle	degree	NONE					±110°
	C axis rotary angle	degree	NONE					360°
Spindle	Spindle taper		BT-50					HSK-100
	Spindle transmission		High/Middle/Low gear box					内藏式
	Spindle speed	rpm	5-2500					12000
	Boring diamesion	mm	ϕ 150					NONE
	Slide block diameter	mm	420x420					
Controller	CNC controller		As customer's choice					
	Spindle motor(aft. 30 min.)	Kw	30/37					34/42
	X/Y/Z motor/c	Kw	14/9x2/9					(XY減速)9/9x2/9
Table	Table size	mm	5200x2100	7200x2100	9200x2100	11,200x2100	13,200x2100	4200x2100
	T-slot(WidthxNo.xPitch)	mm	28x11x185					
Feed	X/Y/Z Rapid feed rate	M/min	5/5/5/5					
	Cutting feed rate	M/min	1-3					
	Min. input increment	mm	0.001					
Magazine	Max. tool dia./with adjacent tool	mm	ϕ 125(250)					
	Max. tool weight	Kg	25					
	Max. tool length	mm	400					
	Tool selection		Automatic random					
	Tool capacity		40/60					
	Pull stud	degree	45°					
	Tool change time(T to T)	sec	13					
Motor	Spindle oil cooler	ℓ	25					60
	Lubrication capacity	ℓ	4x2					
	Heat exchanger	watt	850(60HZ)					
	Coolant tank	ℓ	600/600					
	Pneumatic unit	kg/cm²	6					
	Power supply	KVA	60	70	80	90	100	70
Weight & Dimension	N.W./G.W.	KG	70000	76000	82000	10200	112000	78000
	Packing(LxWxH)	m	拆裝入櫃					
	Floor space(LxWxH)	m	10x6x6	12x6x6	14x6x6	16x6x6	18x6x6	12x8x8(6M)

Specifications are subject to change without notice

Standard Accessories:

1.Dierct drive XYZ
2.M.P.G.
3. Spindle H/M/L gear box
4. Spindle air blast
5. Spindle chiller unit
6. Spindle sound-proof
7. Automatic Lubrication system
8. Coolant ring around spindle
9. XYZ roller type guide way
10. Air and washing gun
11. Wash down nozzles
12. Halogen work lights and alarm light
13. RS -232 interface & 10M cable
14. Heat exchanger on electric cabinet
15. M30 auto power off
16. Leveling pads and adjusting screws
17. Tool box with adjusting tools
18. Operation manual and part list
19. Rigid tapping
20. Chain type chip conveyor
21. Chip auger

Optional Accessories:

1. Coolant through spindle
2. C.T.S. with separate coolant tank(100L)
3. Upgrade spindle motor
4. 12,000/15,000/24,000 rpm HSK
5. Scraper type chip conveyor
6. Oil skimmer
7. Voltage regulator
8. Transformer
9. Seaworthy packing
10. X axis over 17M with worm gear rail
11.Table size:5100mmx3000mm

MH-206~606/MH-208~608-MH-310/MH-710 Traveling Column Family
Horizontal Boring & Milling Machine

PERFECT JET

MH-206/306/406/506/606/308/608

MH-206

MH-310 ~710

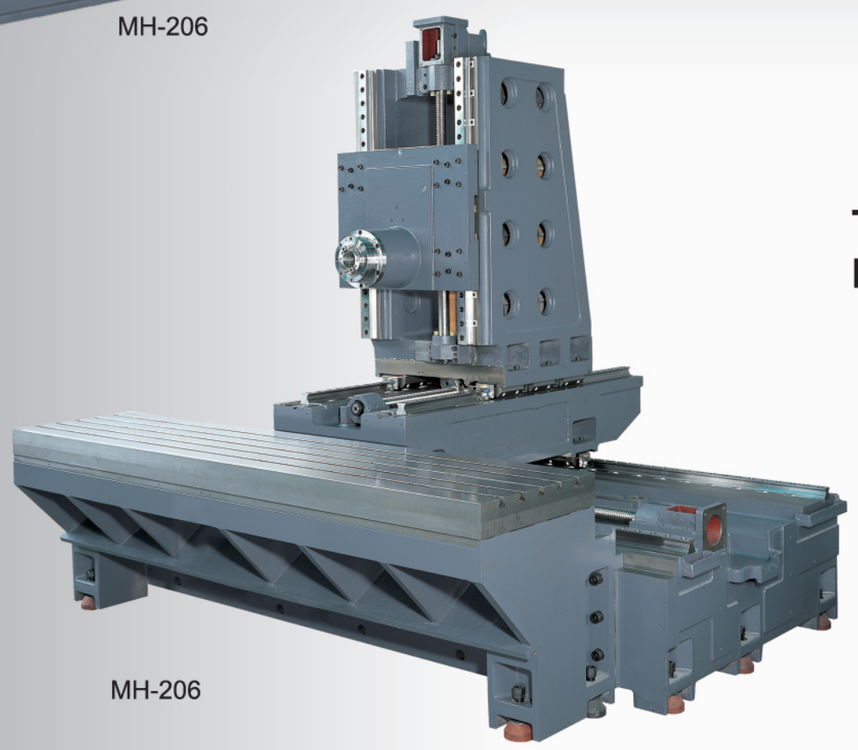

MH-206

Traveling Column Machining Center

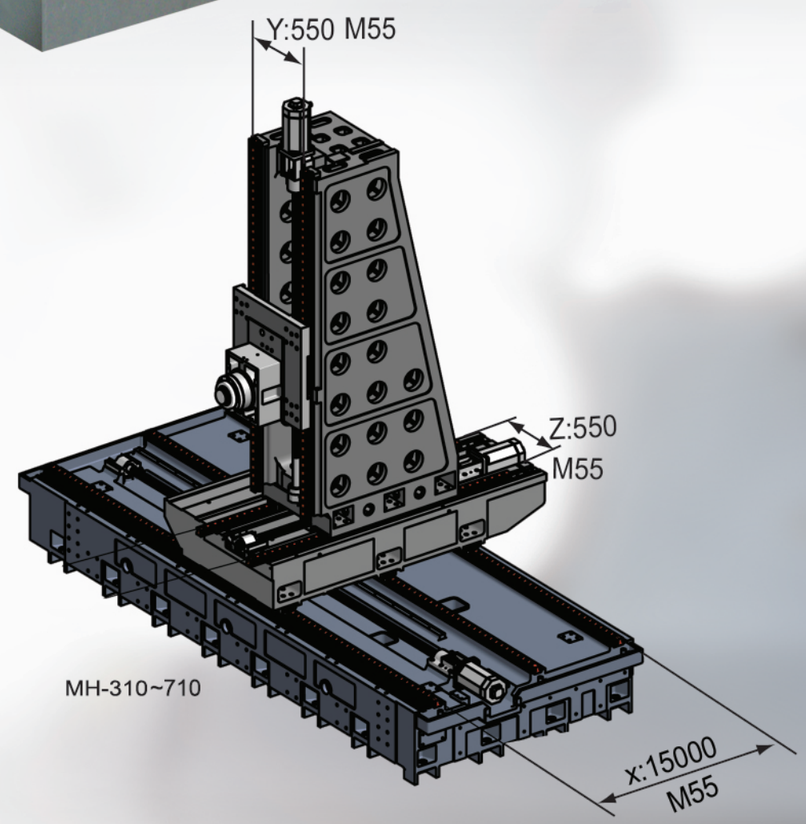

MH-310~710

MH-710-1213-Floor Type Horizontal Boring & Milling Machine

PERFECT JET

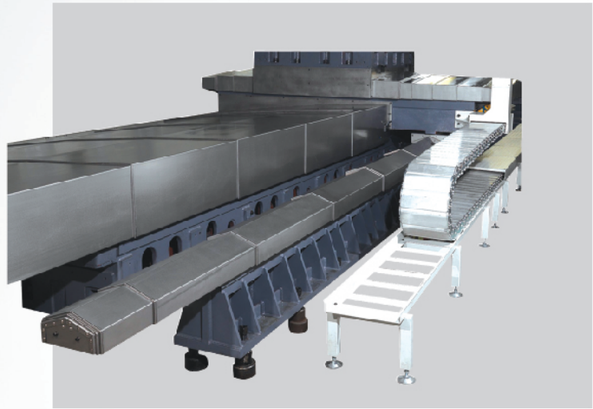

MH-710

MH-1213

MH-500P/630P/800P/1000P
Traveling Column Horizontal Machining Center with APC

PERFECT JET

MH-800P/1000P

MH500P/630P

MH-800P

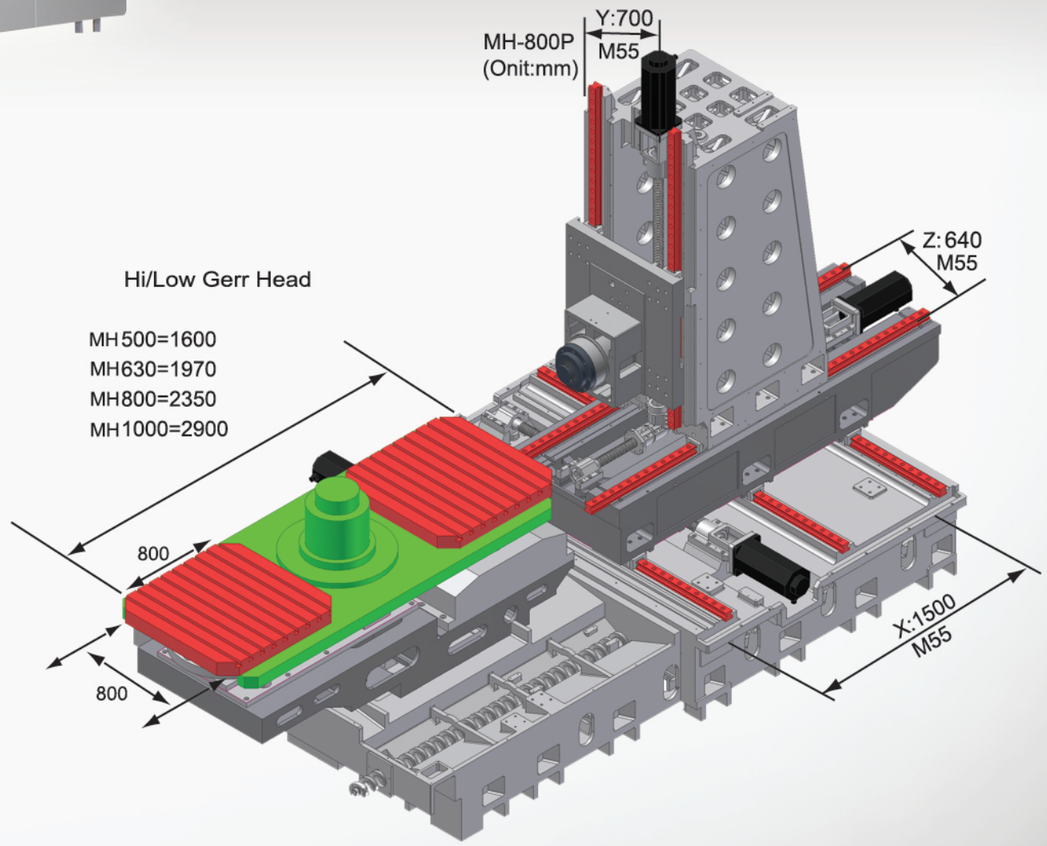

MH-500P High Efficiency & Rigidity Gear Head
Auto Pallet Changer

PERFECT JET

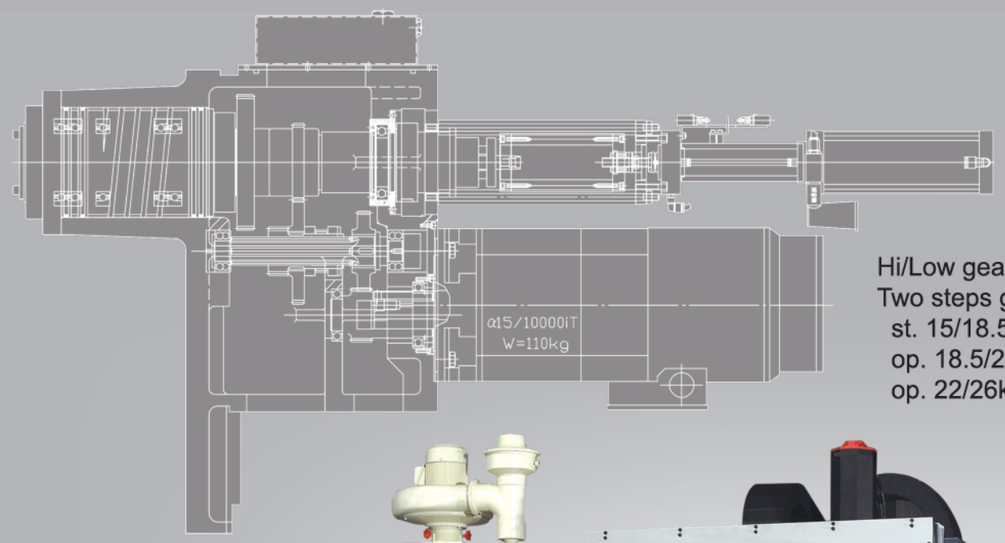

Hi/Low gear 6000rpm
Two steps gear box for heavy cutting & high torque
st. 15/18.5 kw--430Nm
op. 18.5/22kw--529Nm
op. 22/26kw--616Nm

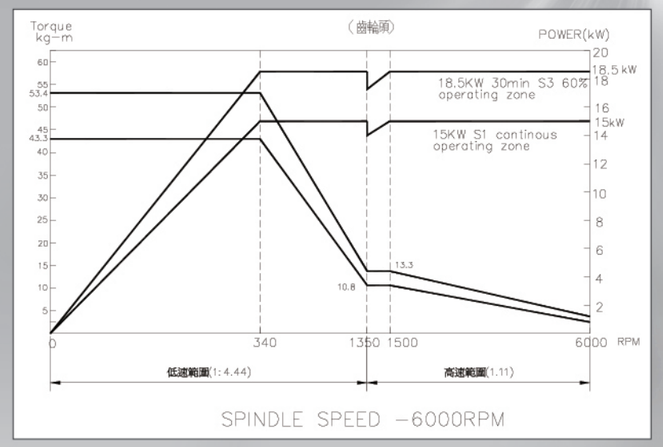

MH-500

(unit:mm)

Hi/Low Gear Head

MH-500
MH-630
MH-800
MH-1000

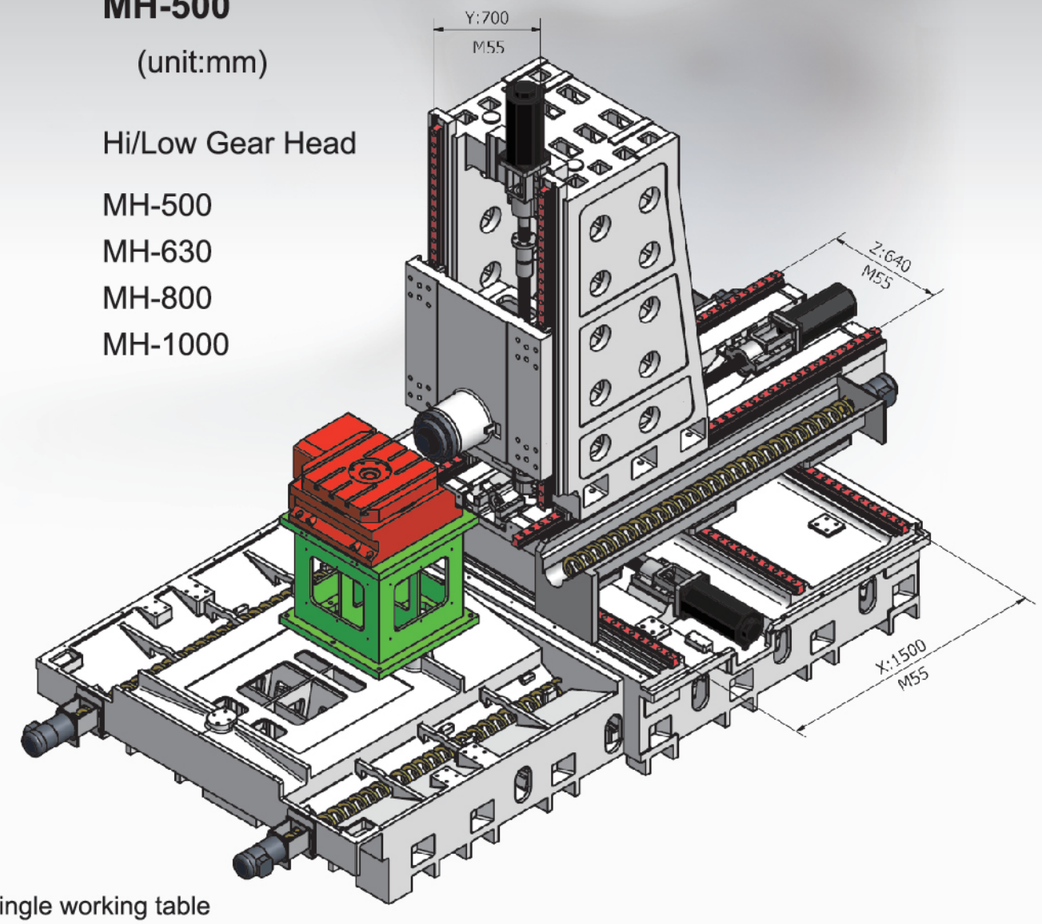

Gear Head MH-500/Single working table

MH-400P Horizontal Machining Center (op. APC)

PERFECT JET

MH-400P

MH-400P

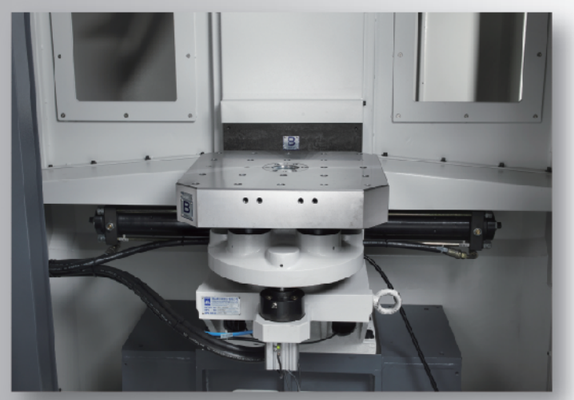

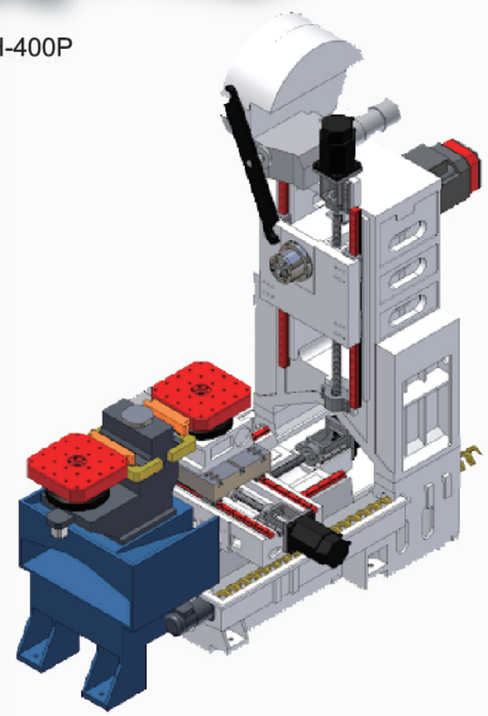

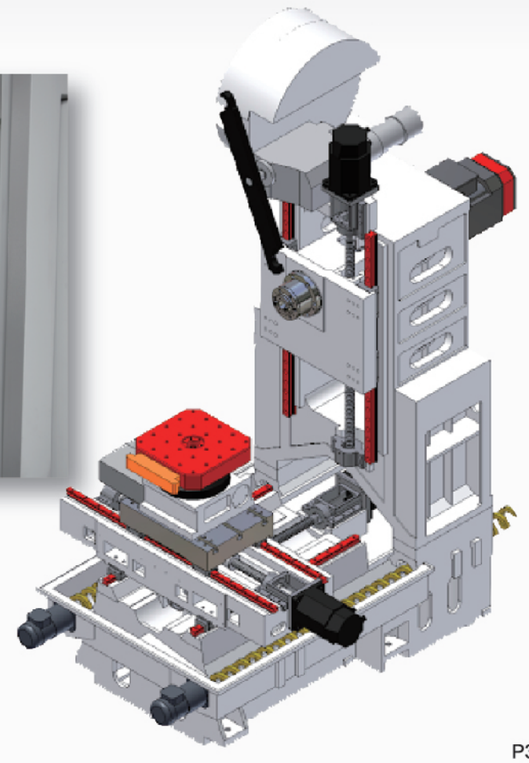

Traveling Column Machining Center with APC

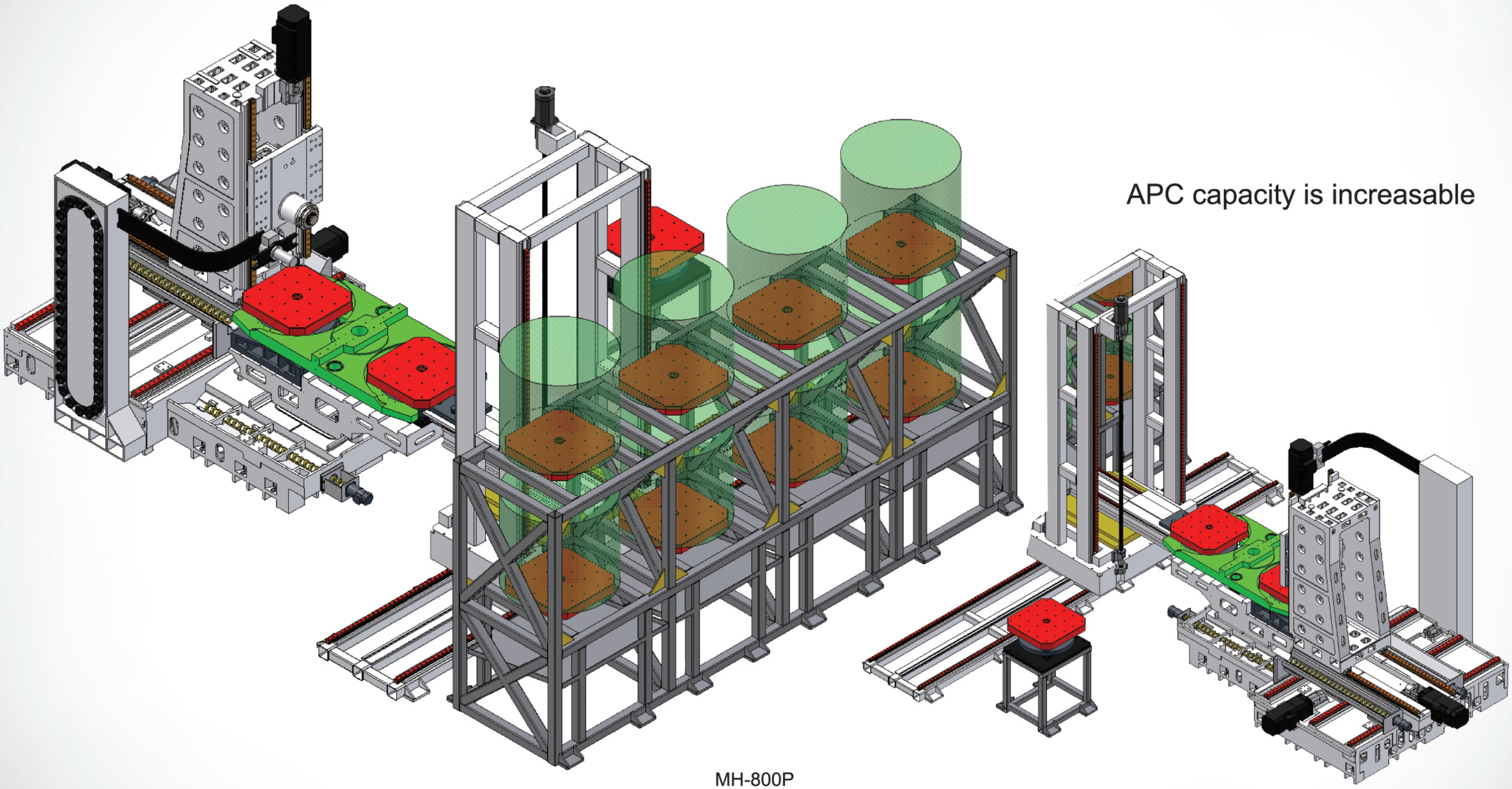

APC capacity is increasable

MH-800P

Traveling Column Family

PERFECT JET

Categories of Magazine

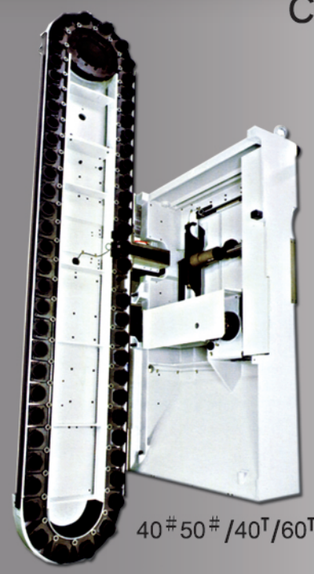

40#50#/40T/60T/80T

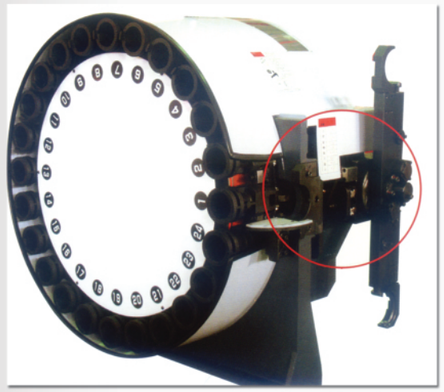

40#16T/20T/24T/30T/36T

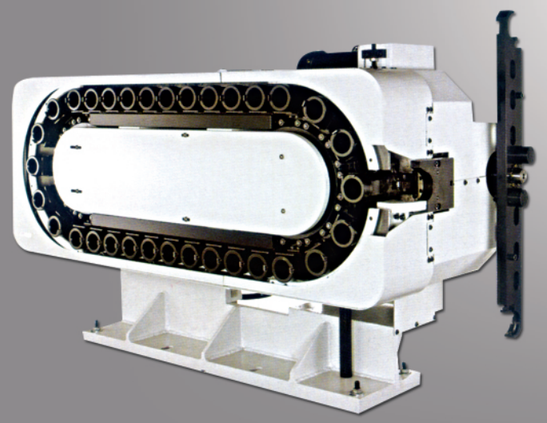

50#40T/60T

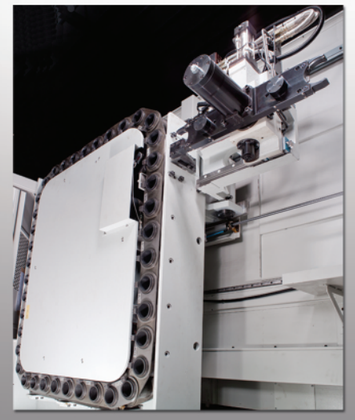

50#40T/60T/80T

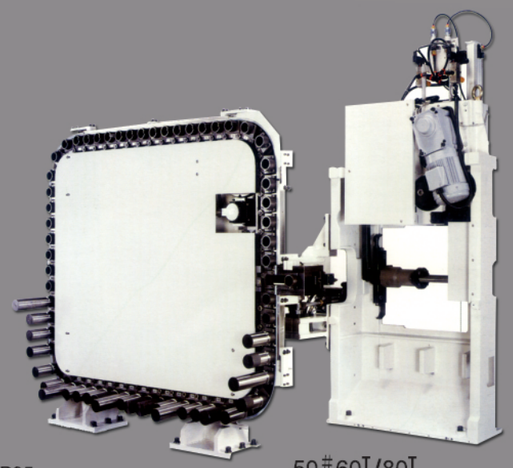

50#60T/80T

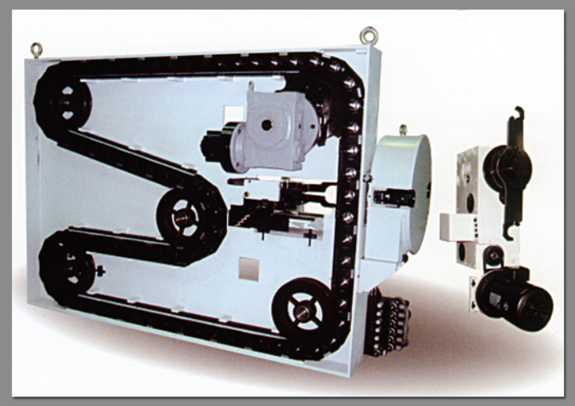

50#80T/120T

Diversity of Coolant Systems

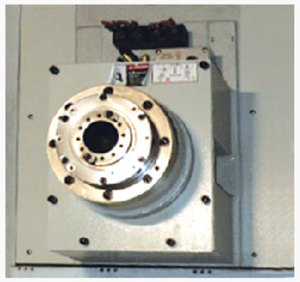

Coolant Systems

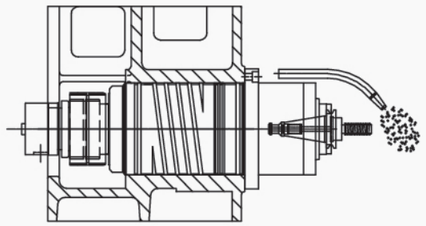

Oil mist (op.)

Purpose: tapping, reaming

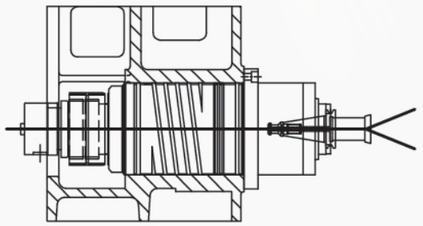

Coolant through Spindle (op.)

Purpose: drilling, boring

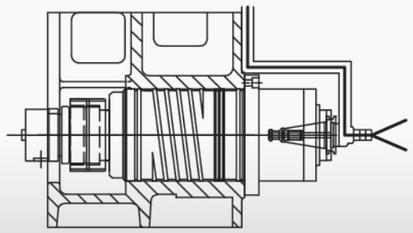

Oil tool holder (op.)

Purpose: drilling, boring

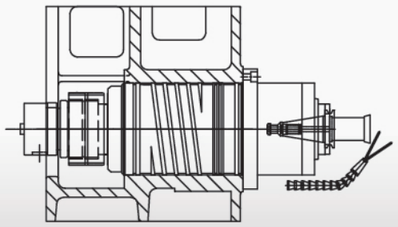

Universal pipe (op.)

Purpose: general

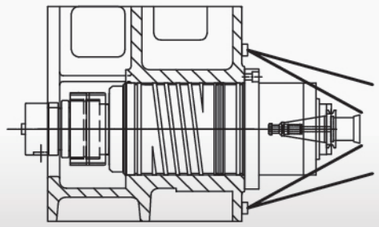

Coolant system

Purpose: general (st.)

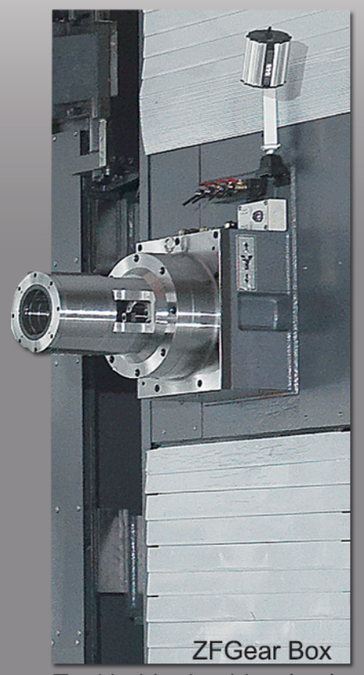

Tool holder bushing (op.)

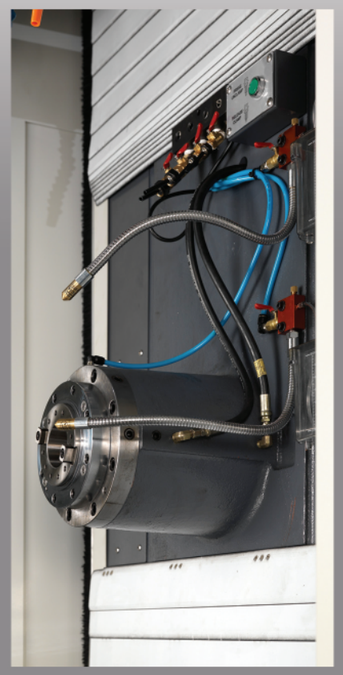

Gear head Hi/Low

Vertical telescopic cover for full splash guard

Traveling Column Family

PERFECT JET

Accessories :

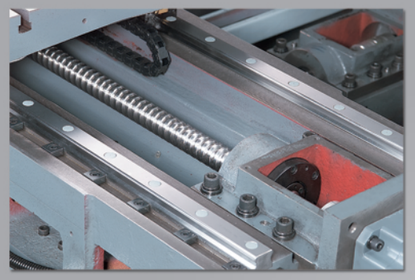

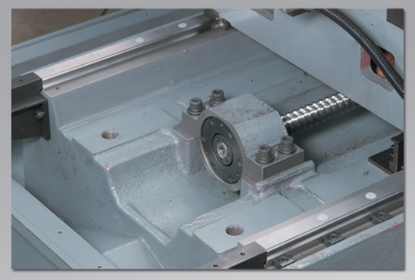

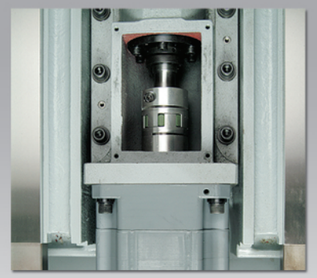

The extraordinary stiffness of the column and bed box construction, combined with large contacting surfaces provides unmatched rigidity. The massive box shaped spindle head casting with generously proportioned internal ribs maximizes rigidity. The perfect combination of a full enclosure and a properly shaped base provides leak-free operation and ease of chip removal. The machine is equipped with a separating system for water and oil.24M/min.(36m/min.) rapid feed.

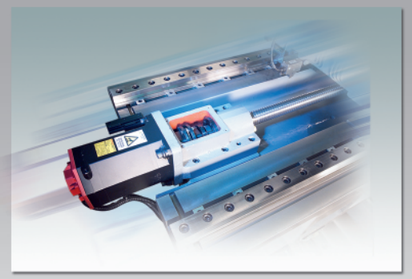

SERVO SYSTEM

All axes movements are extremely ridged through direct-coupled servo motor. Z-axis uses 4kw servo motor which ensures smooth movement. All axes are applied with M55 linear guide ways to provide maximum movement rigidity, slide way accuracy and machine life prolongation

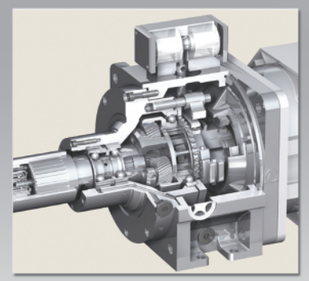

ZF 1:4 GEAR BOX(OP.)

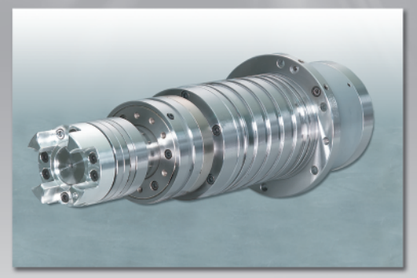

Advantages of a direct-coupled compared to a built-in spindle design:

*High rigidity

*Good heat dissipation

*High reliability at a lower cost

*10000rpm/15000rmp

Operation cabinet comes close column, can elevate up and down independently

Equipped with high reliability lubrication pump and solenoid valves.

Powerful air and wash down gun are conveniently built-in.

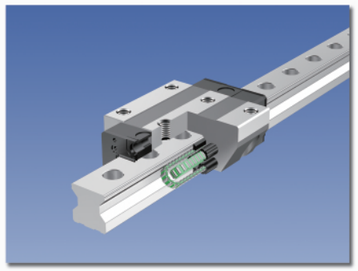

XYZ axis roller type guide way:M55

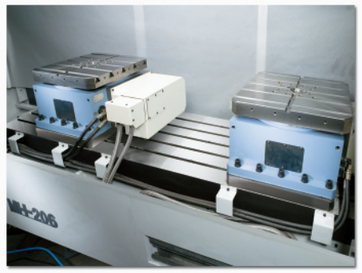

Working Table:500x500mm 2 sets

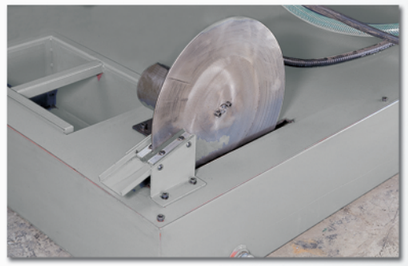

Oil skimmer : Eco-friendly coolant disposal system

Used double ZF gear box when Travel X axis is over 10M

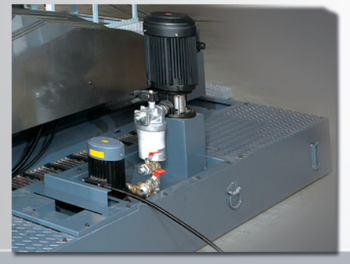

20 bar Pump for CTS

Dual vertical coolant pumps are concealed inside the machine cover for a compact design

RECOMMENDED TYPES OF CHIP CONVEYORS

Cutting Shape	Material	Steelbelt Chip Conveyor	Screw Type Conveyor
Metallic Chip		○	○
Cast Chip		○	
Curly Aluminum Chip		○	○
Aluminum Chip		○	○
Non-Metallic Chip		○	

Scraper type chip conveyor

Chain type chip conveyor

Twin Column Machining Center

High Efficiency & Rigidty Auto Pallet Changer

PERFECT JET

MH-206/306/406 /606 G(H)-2T

MH-208/308/408 /608 G(H)-2T

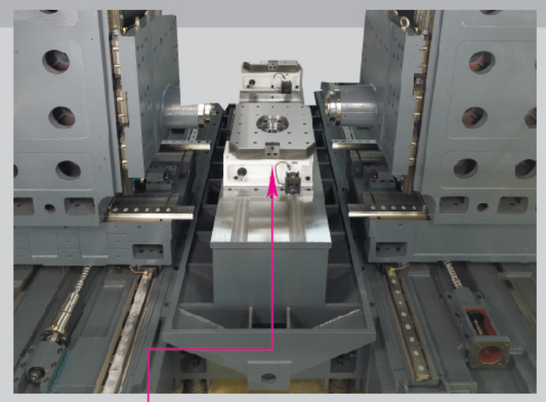

Table Q'ty.: one or two pallets

Table size: 500x500 630x630
800x800 1000x1000mm

Indexing Accuracy:1° or 0.001°

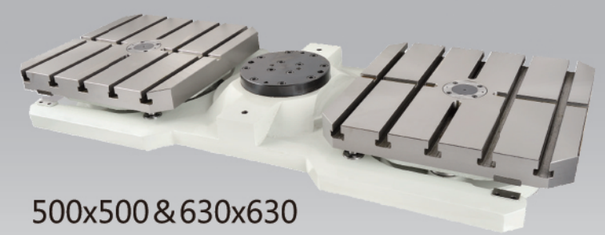

500x500 & 630x630

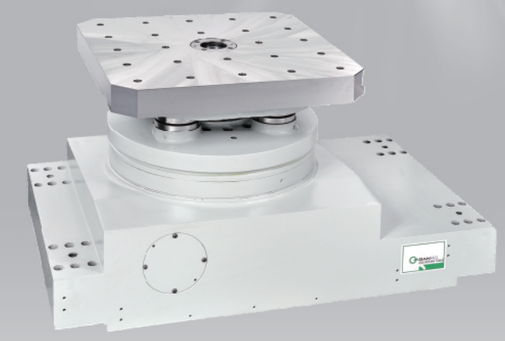

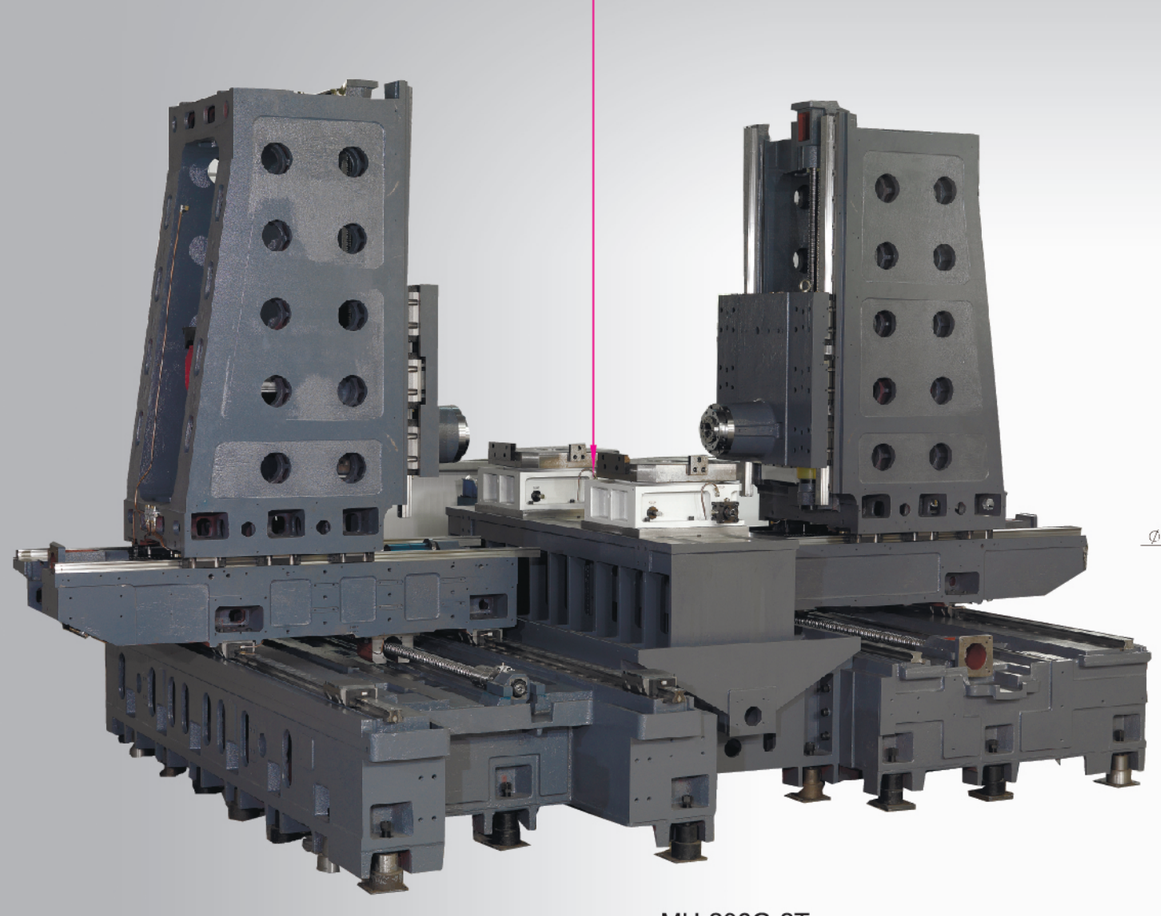

MH-206G-2T

機型	單位	MH-400	MH-500	MH-630	MH-800	MH-1000
容許工作負載	kg	300	800	1200	2000	3000
交換時間(馬達)	sec	10	10	10	16	100
交換時間(油壓)	sec	12	15	22	25	100

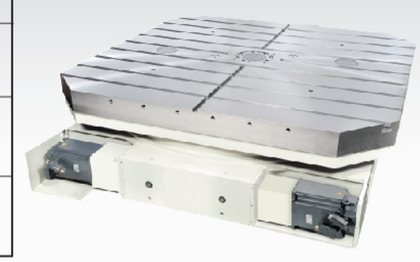

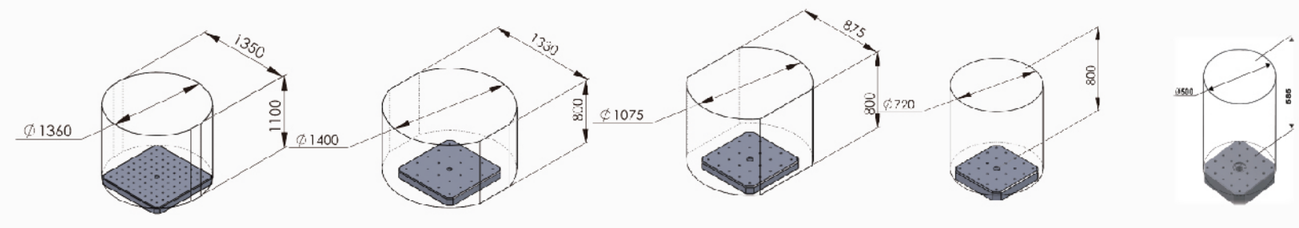

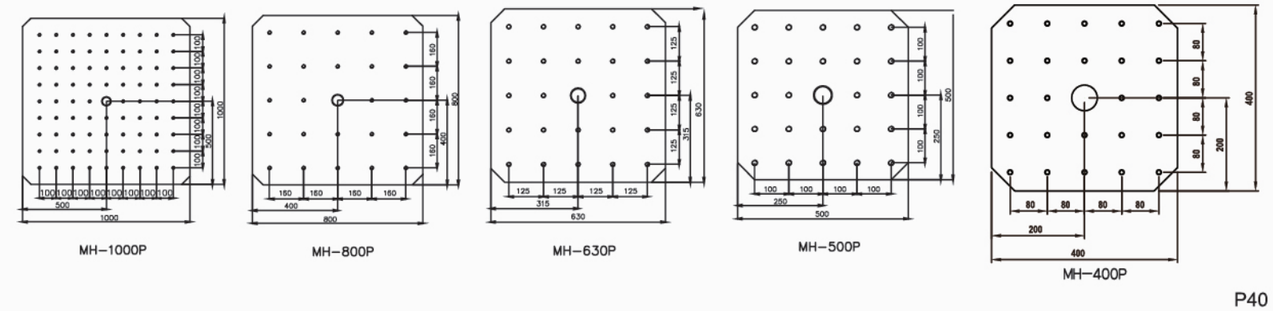

Traveling Column Family

PERFECT JET

MH-206 / 306 / 406 / 606、MH-208 / 308 / 408 / 608、MH-310 / 710 / 1213

		單位	MH-206 / 306 / 406 / 606	MH-208 / 308 / 408 / 608	MH-310	MH-710	MH-1213
Travel	X axis	mm	2000 / 3000 / 4000 / 6000	2000 / 3000 / 4000 / 6000	3000	6800	12000
	Y/Z axis	mm	550 / 600	700 / 800	1500 / 1000	2000 / 1000	
	W axis	mm	NONE				
	Spindle nose to table surface	mm	120-670	120-620	1000-2072	1000-2130	
	Spindle center to column surface	mm	550	750	600-2100	600-2600	
	X/Y/Z way span	mm	1100 / 550 / 550	1500 / 550 / 550	1500 / 550 / 550	1500/1100/1100	
	Position accuracy	mm	±0.005				
	Repeatability accuracy	mm	≦0.01				
			CP.manua	HN uivea		head	
			CP.manua	HN uivea		head	
Spindle	Spindle taper		BT-50				
	Spindle transmission		Direct drive 1,000(o.p.:ZF GERD box)				
	Spindle speed	rpm	st Hi/Low 6000(op 8000)/op ZF Gear 6000-8000rpm				
Controller	CNC controller		As customer's choice				
	Spindle motor(aft. 30 min.)	Kw	15 / 18.5		18.5 / 22 op:30/37.7		
	X/Y/Z motor	Kw	7 / 7 /8			7 / 7 / 7 (X/Z GBox)	
Table	Table size	mm	2500/3650/4800/6500x600	2500/3500/4600/6500x800	4200x2100	4200x2100x2	4200x2100x4
	T-slot(WidthxNo.xPitch)	mm	18 x 5 x 100	18 x 8 x 100	22 x 11 x 18		
Feed	X/Y/Z Rapid feed rate	M/min	24 / 24 / 24		8 / 8 / 8	6 / 6 / 6	
	Cutting feed rate	M/min	1-12		1-5		
	Min. input increment	mm	0.001				
Magazine	Max. tool dia./with adjacent tool	mm	φ 110 (φ 220)				
	Max. tool weight	Kg	15				
	Max. tool length	mm	350				
	Tool selection		Automatic random				
	Tool capacity		40				
	Pull stud	degree	45°				
	Tool change time(T to T)	sec	7.5				
Motor	Spindle oil cooler	ℓ	40				
	Lubrication capacity	ℓ	4				
	Heat exchanger	watt	40 x 2				
	Coolant tank	ℓ	300/350/400/450	300/350/400/450	300	400	
	Pneumatic unit	kg/cm²	6				
	Power supply	KVA	45	50	40		
Weight & Dimension	N.W./G.W.	KG	14000/18000/22000/30000	18000/2400/30000/42000	25000	56000	102000
	Packing(LxWxH)	m	6.2/7.2/8.2/10.2x3.4x3.1	6.2/7.2/8.2/10.2x3.6x3.3	拆機入櫃		
	Floor space(LxWxH)	m	6.2/7.2/8.2/10.2x3.4x3.1	6.2/7.2/8.2/10.2x3.6x3.3	6x5.4x4.3	9x5.9x4.8	22x10x5.5

Specifications are subject to change without notice

Standard Accessories:

1. Dierct drive XYZ
2. M.P.G.
3. Full splash guard
4. Spindle direct drive10,000rpm
5. Spindle air blast
6. Spindle chiller unit
7. Spindle sound-proof
8. Automatic Lubrication system
9. Coolant ring around spindle
10. XYZ roller type guide way
11. Air and washing gun
12. Wash down nozzles
13. Halogen work lights and alarm light
14. RS-232 interface & 10M cable
15. Heat exchanger on electric cabinet
16. M30 auto power off
17. Leveling pads and adjusting screws
18. Tool box with adjusting tools
19. Operation manual and part list
20. Rigid tapping
21. Chain type chip conveyor
22. Chip auger

Optional Accessories:

1. Coolant through spindle
2. C.T.S. with separate coolant tank(100L)
3. Upgrade spindle motor
4. 12,000/15,000/24,000 rpm HSK
5. Scraper type chip conveyor
6. Oil skimmer
7. Voltage regulator
8. Transformer
9. Seaworthy packing

MH-400P/630P/800P/1000P

		單位	MH-400P	MH-500P	MH-630P	MH-800P	MH-1000P
Travel	X axis	mm	600	1000		1500	1500
	Y/Z axis	mm	500 /450	700 / 700			1000/1000
	Spindle nose to table surface	mm	140-590	150-850			200-1200
	Spindle center to column surface	mm	85-585		100-800		100-1100
	X/Y/Z way span	mm	300 / 500 / 530		1500 / 700 / 640		
	Position accuracy	mm	±0.005				
	Repeatability accuracy	mm	HN uivea		≦0.01（以内）		
Spindle	Spindle taper		BT-40	op:BT-40	BT-50		
	Spindle transmission		Direct	(o.p.:Direct drive)	Direct drive		Hi/Low gear
	Spindle speed	rpm	8000	op:10000	6000 (op 8000)		
Controller	CNC controller		As customer's choice				
	Spindle motor(aft. 30 min.)	kw	7.5/11kw	11/15		15/18.5(18.5/22)	
	X/Y/Z motor/c	kw	2 / 3 / 3/1.5	4 / 7 / 4/ 3		7 / 7 / 9 /7	
Table	Table size	mm	400x400x2	500x500x2	630x630x2	800x800x2	1000x1000x2
	T-slot(WidthxNo.xPitch)	mm	14x3x100	18x5x100	18x5x125	22x7x100	22x7x130
	Min. increment	deg	0.001	1°(op 0.001°)			
Feed	X/Y/Z Rapid feed rate	m/min	36 / 36 / 36	20 / 20 / 15		15 / 15 / 10	
	Cutting feed rate	mmin	1-12				
	Min. input increment	mm	0.001				
Magazine	Max. tool dia./with adjacent tool	mm	φ75 (φ150)	φ110 (φ220)			
	Max. tool weight	kg	8	15			
	Max. tool length	mm	300	400			
	Tool selection		Automatic random				
	Tool capacity		24	40 / 60 （OP-60~120）			
	Pull stud	deg.	45°				
	Tool change time(T to T)	sec	2.5	7.5			
Motor	Spindle oil cooler	l	18	40			
	Lubrication capacity	l	4				
	Heat exchanger	wait	40 x 2				
	Coolant tank	l	250	300		350	400
	Pneumatic unit	kg/cm²	6				
	Power supply	kva	30	35		40	45
Weight & Dimension	N.W./G.W.	ton	6.5/7.5	15/17.5	17/20	19/22	25/28
	Packing(LxWxH)	m	3.7x2.2x2.3	5.2x3.1x3.2	5.5x3.1x3.2	5.8x3.1x3.2	6.2x3.4x3.2
	Floor space(LxWxH)	m	4.2x3.2x2.8	6.4x4.9x3.4	6.5x4.9x3.4	6.6x4.9x3.4	6.8x5.1x3.7

Specifications are subject to change without notice

Standard Accessories:

1.Dierct drive XYZ
2.M.P.G.
3. Full splash guard
4. Spindle Hi/Low gear box
5. Spindle air blast
6. Spindle chiller unit
7. Spindle sound-proof
8. Automatic Lubrication system
9. Coolant ring around spindle
10. XYZ roller type guide way
11. Air and washing gun
12. Wash down nozzles
13. Halogen work lights and alarm light
14. RS-232 interface & 10M cable
15. Heat exchanger on electric cabinet
16. M30 auto power off
17. Leveling pads and adjusting screws
18. Tool box with adjusting tools
19. Operation manual and part list
20. Rigid tapping
21. Chain type chip conveyor
22. Chip auger

Optional Accessories:

1. Coolant through spindle
2. C.T.S. with separate coolant tank(100L)
3. Upgrade spindle motor
4. 12,000/15,000/24,000 rpm HSK
5. Scraper type chip conveyor
6. Oil skimmer
7. Voltage regulator
8. Transformer
9. Seaworthy packing
10. ZF gear box

MH-208-2H Traveling Column Family Twin Spindle head Machining Center

High Efficiency & Rigidty Gear Head Two Working Area

PERFECT JET

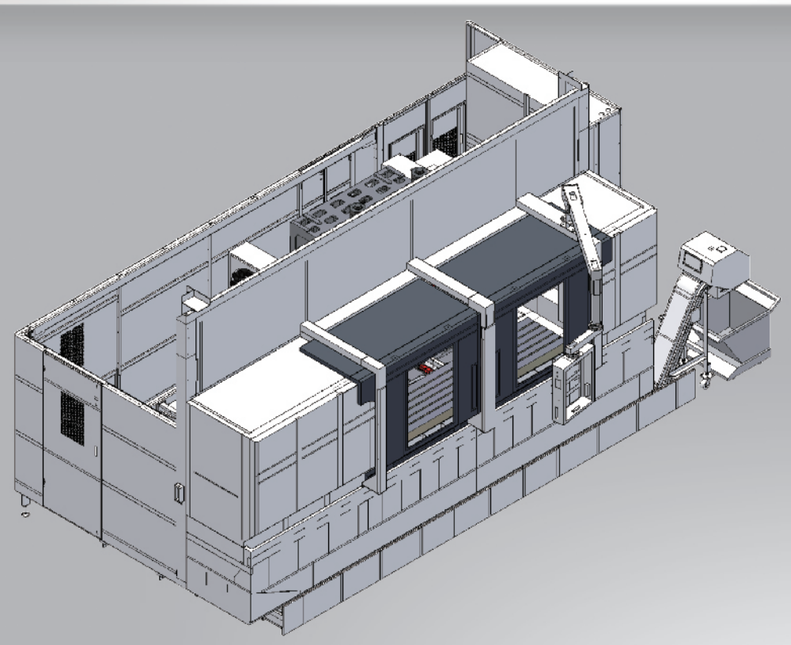

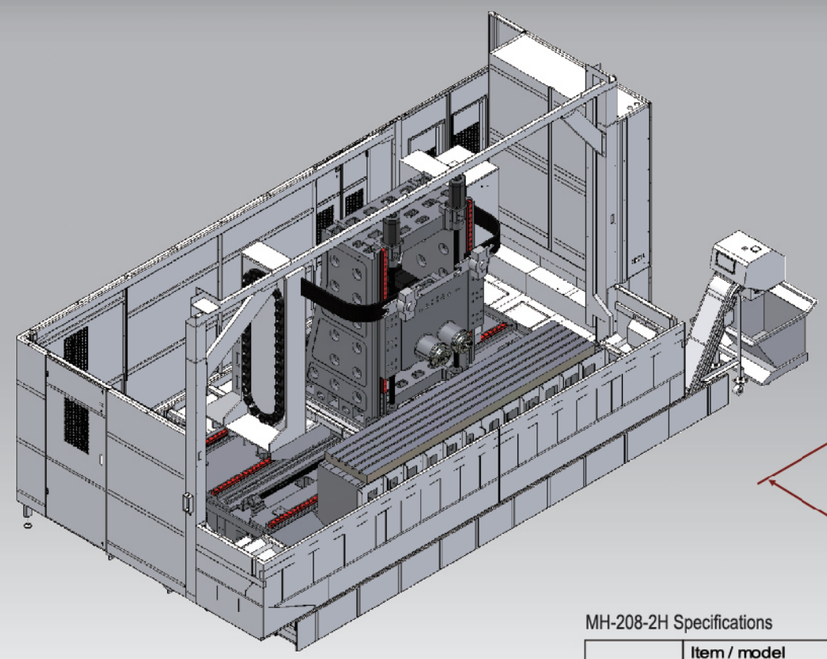

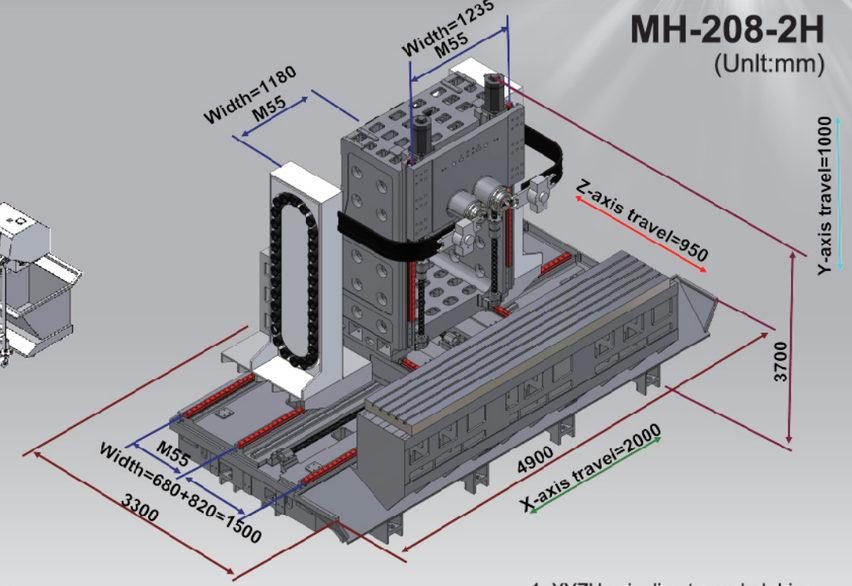

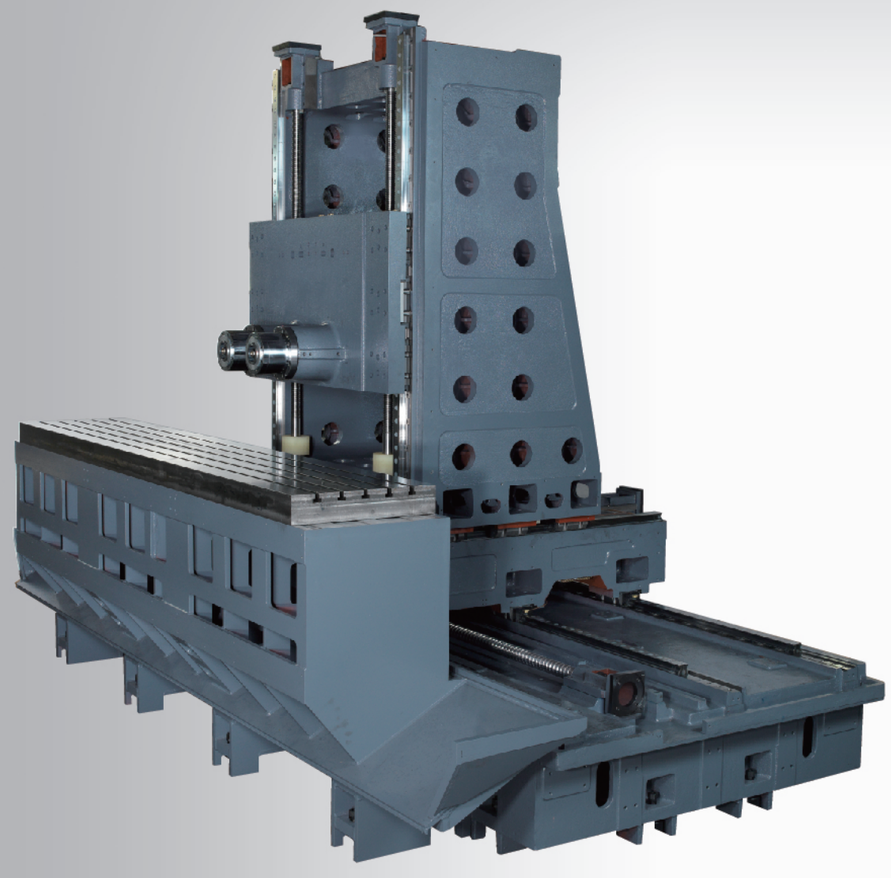

MH-208-2H Specifications

	Item / model	Unit	MH-208-2H
Travel	Travel ： X/Y/Z axis	mm	2000/600/600
	Spindle nose to table center	mm	100-700
	Spindle Center to Table surface	mm	200-800
	X/Y/Z axis way span	mm	1500/1235/1180
Spindle	Spindle taper		BT-50(O.P HSK-100A)
	Spindle transmission		Gears with Hi/Low ranges
	Spindle speed	RPM	6000 (opt 8000)
	Dual spindle pitch	mm	317
Ballscrew	dimensions X/Y/Z axis	mm	Ø63/Ø50x2/Ø50
Controller	Controller		Siemens 840DSL
	Spindle motor	KW	11 / 15 (O.P 15/18.5)
	X/Y/Z axis motor /Cx2	KW	9/9x2/7x2
Table	Table size	mm	610x3300
	T slots	mm	18x5x100
	Ma.x table load	KG	2000
Feed	X/Y/Z rapid feed rate	M/min	30 /24/30
	Cutting feed rate	M/min	1~12000
	Position accuracy	mm	±0.005 (VDI3341)
	Ball bar accuracy	mm	0.01
	Min. input increment	mm	0.001
Magazine	Max. tool dia. / with adjust tool	mm	Ø110 / Ø220
	Max. tool weight	KG	15
	Max. tool length	mm	400
	Tool selection		Spindle clamped
	Magazine capacity	PCS	32(O.P40)
Motors	Spindle chiller motor	W	925 W
	Automatic lubrication tank	L	4
	Heat changer motor	W	40Wx2
	Coolant tank capacity	L	400
	Pneumatic requirement	kg/cm²	6
	Power requirement	KVA	50
Weight/Size	Machine weight (N.W./G.W.)	KG	15000 / 18000
	Machine packing side	mm	6500x3100x3200
	Machine floor space	mm	7570 x4360x3600

Standard accessories

1. XYZU axis direct-coupled drive
2. M.P.G.
3. Fully enclosure spalsh guard & pendant operation cabinet
4. Gear box spindle with Hi/Low ranges
5. spindle air blast
6. spindle chiller
7. Automatic lubrication system
8. Coolant system
9. Without counter balance weight
10. Air and wash down gun
11. Wash down nozzels
12. Warking lamp & alarm light
13. RS232 interface with cable
14. Heat exchanger auto power off
16. leveling pads & adjusting bolts
17. Tool box with tools
18. Operation manuals & part list
19. Rigid tapping
20. Chain type chip conveyor
21. Two sets screw type chip conveyors

Optional:
1. Coolant through spindle spindle
"2. Coolant through spindle system (extra coolant tank) "
3. Upgrade spindle motor
4. HSK-100A spijnlde taper (8000 rpm)
5. 40T magazine capacity
6. Oil skimmer
7. Transformer voltage regulator
9. Exporting packing
10.Controller: SIEMENS 840DSL

MH-2512G/3012G
Fixed Column Horizontal Gear Head Machine center

PERFECT JET

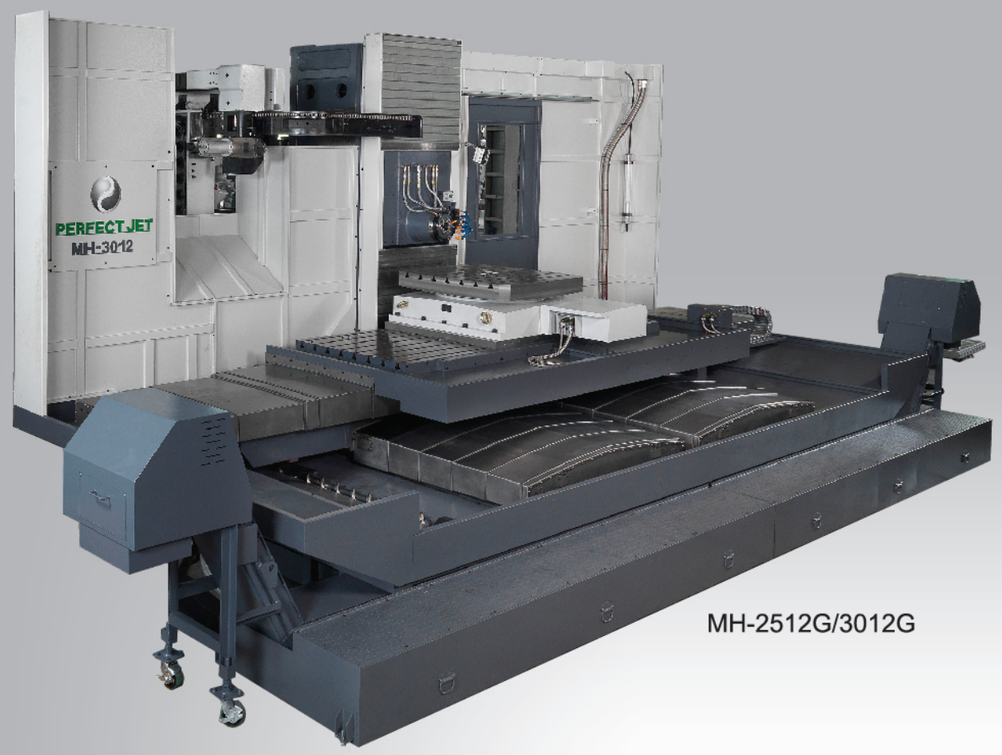

MH-2512G/3012G

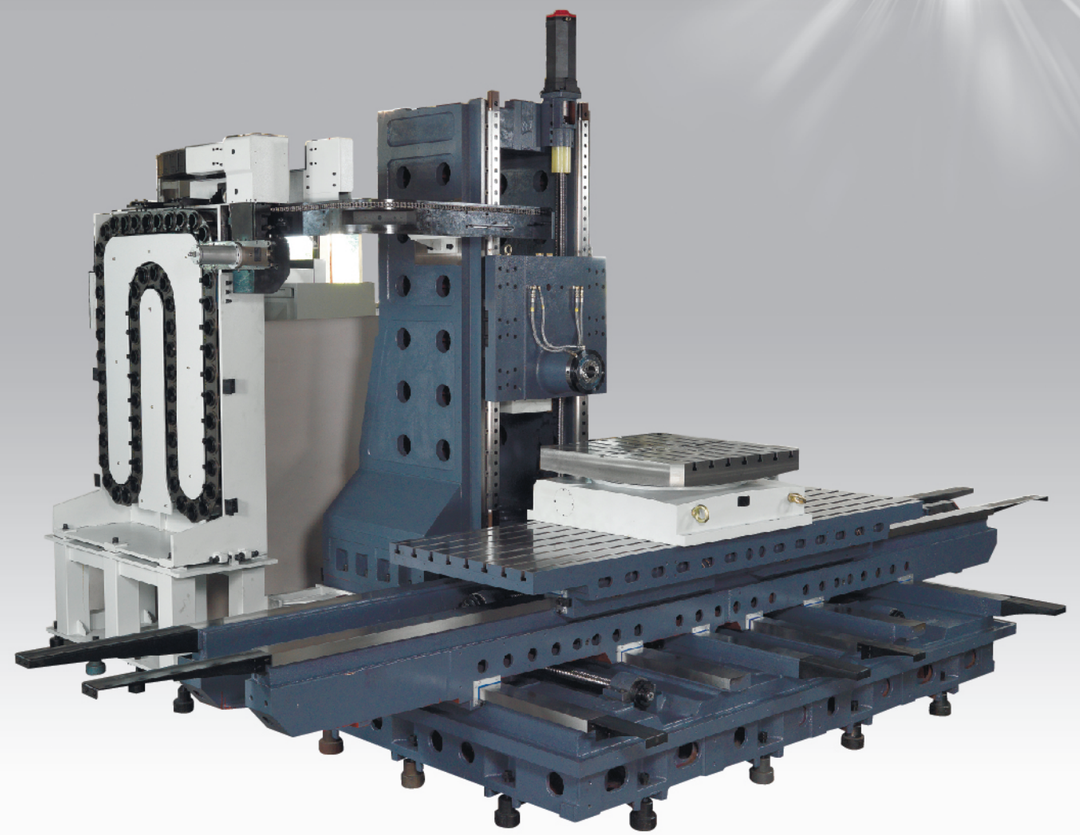

MH-2512G/3012G

MCV-2510/3010 Y axis front/rear has two ball screws and three chip augers.

Two separated telescopic covers stand side by side and enable to clean up chips

MH-2512G/3012G
Fixed Column Horizontal Gear Head Machine center

PERFECT JET

MH-2512(G)
MH-3012(G)

Model \ Part	A	B	C	D	E	F	G
MH-2512(G)	6500	4000	3950	2600	4000	5020	1500
MH-3012(G)	7200	4000	3950	2600	4000	5020	1500

MH-2512/3012G

	Model	UNIT	MH-2512G	MH-3012G
Travel	X axis	mm	2500	3000
	Y/Z axis	mm	1200(op1500)/1000	
	Spindle nose to table surface	mm	250~1450	
	Spindle center to column surface	mm	250~1250	
	X/Y/Z way span	mm	660/700/3400	
	Position accuracy	mm	±0.005	
	Repeatability accuracy	mm	≦0.01	
Spindle	Spindle taper		BT50	
	Spindle transmission		Hi/Low gear box	
	Spindle speed 20-6000	rpm	Low20~799/Hi800~6000	
Controller	CNC controller		As customer´s request	
	Spindle motor(aft. 30 min.))	Kw	18.5/ 22	
	X/Y/Z motor/c	Kw	9/7(B)/7x2/7 /4.5	
Table	Table size	mm	2700x1000	3100x1000
	T-slot(WidthxNo.xPitch)	mm	22x8x125	
Feed	X/Y/Z Rapid feed rate	M/min	15/15/10	
	Cutting feed rate	M/min	1-12	
	Min. input increment	mm	0.001	
Magazine	Max. tool dia./with adjacent tool	mm	ϕ350	
	Max. tool weight	Kg	15	
	Max. tool length	mm	400	
	Tool selection		Automatic random	
	Tool capacity		40	
	Pull stud	degree	45°	
	Tool change time(T to T)	sec	2.5	
Motor	Spindle oil cooler	ℓ	120	
	Lubrication capacity	ℓ	4	
	Heat exchanger	watt	40 x 2	
	Coolant tank	ℓ	200	
	Pneumatic unit	kg/cm²	6	
	Power supply	KVA	50	
Weight & Dimension	N.W./G.W.	KG	25000/25500	27000/27500
	Packing(LxWxH)	m	6.4x3.3x3.5	7.1x3.3x3.5
	Floor space(LxWxH)	m	6.5x4.0x4.0	7.2x4.0x4.0

產品規格若有變更，恕不另行通知

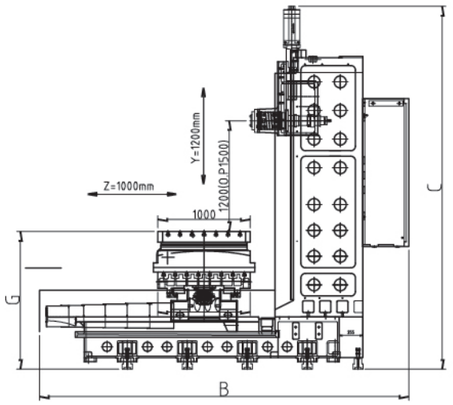

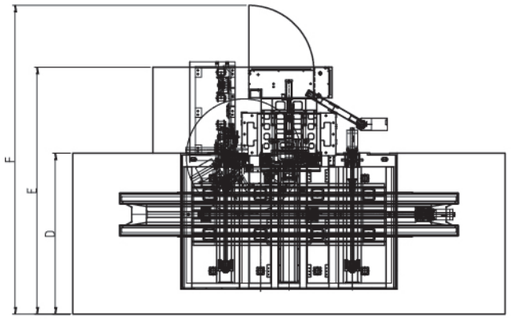

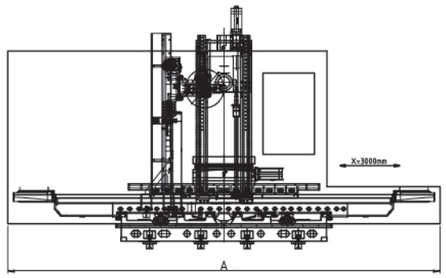

Standard Accessories:
1.Dierct drive XYZ
2.M.P.G.
3. Full splash guard
4. Spindle Hi/Low gear box
5. Spindle air blast
6. Spindle chiller unit
7. Spindle sound-proof
8. Automatic Lubrication system
9. Coolant ring around spindle
10. XYZ roller type guide way
11. Air and washing gun
12. Wash down nozzles
13. Halogen work lights and alarm light
14. RS-232 interface & 10M cable
15. Heat exchanger on electric cabinet
16. M30 auto power off
17. Leveling pads and adjusting screws
18. Tool box with adjusting tools
19. Operation manual and part list
20. Rigid tapping
21. Chain type chip conveyor
22. Chip auger

Optional Accessories:
1. Coolant through spindle 20BAR
2. C.T.S. with separate coolant tank (600L/600L=1200L)
3. Upgrade spindle motor
4. Scraper type chip conveyor
5. Oil skimmer
6. Voltage regulator
7. Transformer
8. Seaworthy packing
9. Rotary table 630/800/1000mm²

Traveling Column Family

PERFECT JET

Pull stud graphs

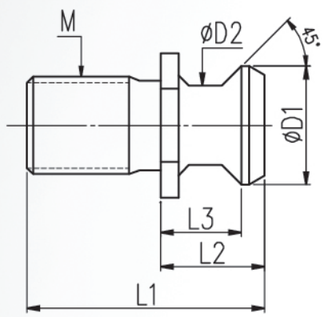

Model No.	D1	D2	L1	L2	L3	M
CAT40-A	0.74	0.49	1.5	0.64	0.44	5/8"-11
CAT50-A	1.14	0.82	2.3	1.0	0.7	1"-8

Machining Accuracy

NO.	JIS	NO.	JIS
1 *Straightness*	0.015	6 *Straightness*	0.015
2 *Inclination*	0.02	7 *Inclination*	0.02
3 *Roundness*	0.02	8 *Concentricity*	0.025
4 *Straightness*	0.015	9 *Straightness*	0.015
5 *Parallelism*	0.02	10 *Perpendicularity*	0.02

Unit：mm

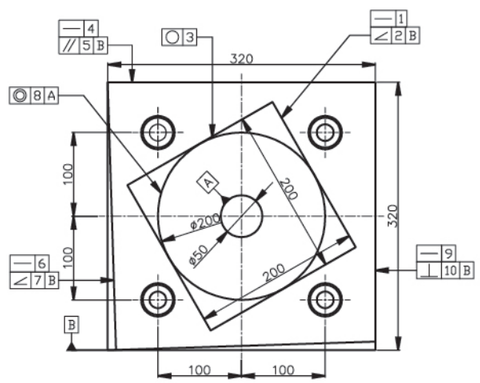

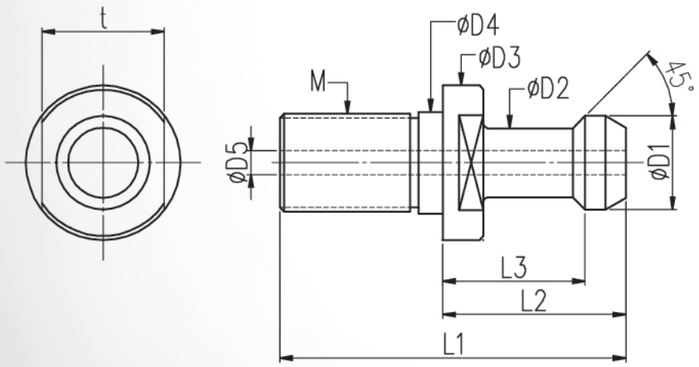

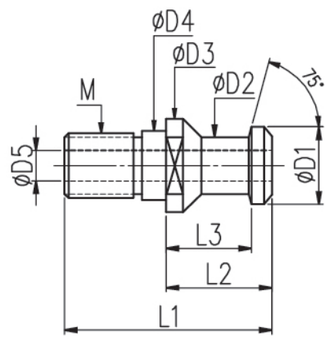

Model No.	D1	D2	D3	D4	D5	L1	L2	L3	M	t
BT40	15	10	23	17	X	60	35	28	M16x2.0	19
BT40-CTS					4					
BT50	23	17	38	25	X	85	45	35	M24x3.0	30
BT50-CTS					6					

Model No.	D1	D2	D3	D4	D5	L1	L2	L3	M
DIN69872A-16	19	14	23	17	7.5	54	26	20	M16x2.0
DIN69872B-16									
DIN69872A-24	28	21	36	25	11.5	74	34	25	M24x3.0
DIN69872B-24									

According to value velocity, properly apply both cutting feed rate and spindle speed to prolong tool lifespan

V=πDN (V: velocity, π: 3.14, D: tool diameter, N: spindle speed)

Model		MH-500-630	MH-800	M-1000
Thread type	MM	M24XP3	M30XP3.5	M48XP5
Spindle speed	RPM	132	106	66

1. Drilling terms: approx. HSSHRC50, twist drill,
   Velocity: 30m/min, material: medium carbon steel

Model		MH-500-630	MH-800	M-1000
Drilling dia	MM	Φ30	Φ40	Φ50
Feed rate	MM/REV	0.15	0.15	0.15
Cutting feed	MM/MIN	120	130	140
Spindle speed	RPM	318	239	191

2. Drilling terms: tungsten steel rapid drill,
   Velocity: 70m/min, material: medium carbon steel

Model		MH-500-630	MH-800	M-1000
Drilling dia	MM	Φ30	Φ40	Φ50
Feed rate	MM/REV	0.15	0.15	0.15
Cutting feed	MM/MIN	120	130	150
Spindle speed	RPM	743	557	445

3. Milling terms: face milling cutter, tungsten steel cutter, 2 flutes,
   Velocity: 70m/min, material: medium carbon steel

Model		MH-500-630	MH-800	M-1000
Milling type	MM	Φ100X4 flutes	Φ100X4flutes	Φ100X4 flutes
Cutting feed rate	MM/MIN	300	400	500
Cutting width	MM	100	100	100
Cutting depth	MM	5	5	5
Spindle speed	RPM	222	222	222
Removal rate	CC/MIN	150	200	250

4. Side milling terms: straight milling cutter, tungsten steel blades,
   Velocity: 70m/min, material: medium carbon steel
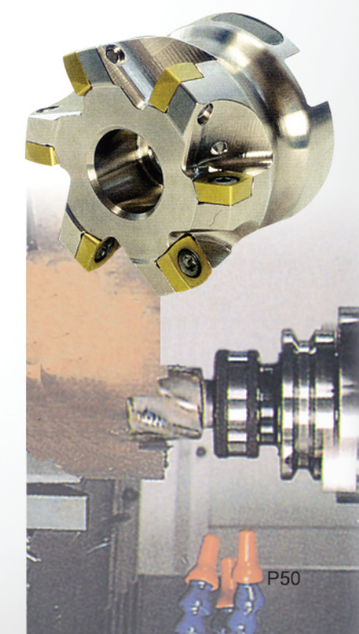
Model		MH-500-630	MH-800	M-1000
Milling type	MM	Φ50X6 flutes	Φ50X6 flutes	Φ50X6 flutes
Cutting feed rate	MM/MIN	60	80	100
Cutting width	MM	50	50	50
Cutting depth	MM	50	50	50
Spindle speed	RPM	445	445	445
Removal rate	CC/MIN	150	200	250